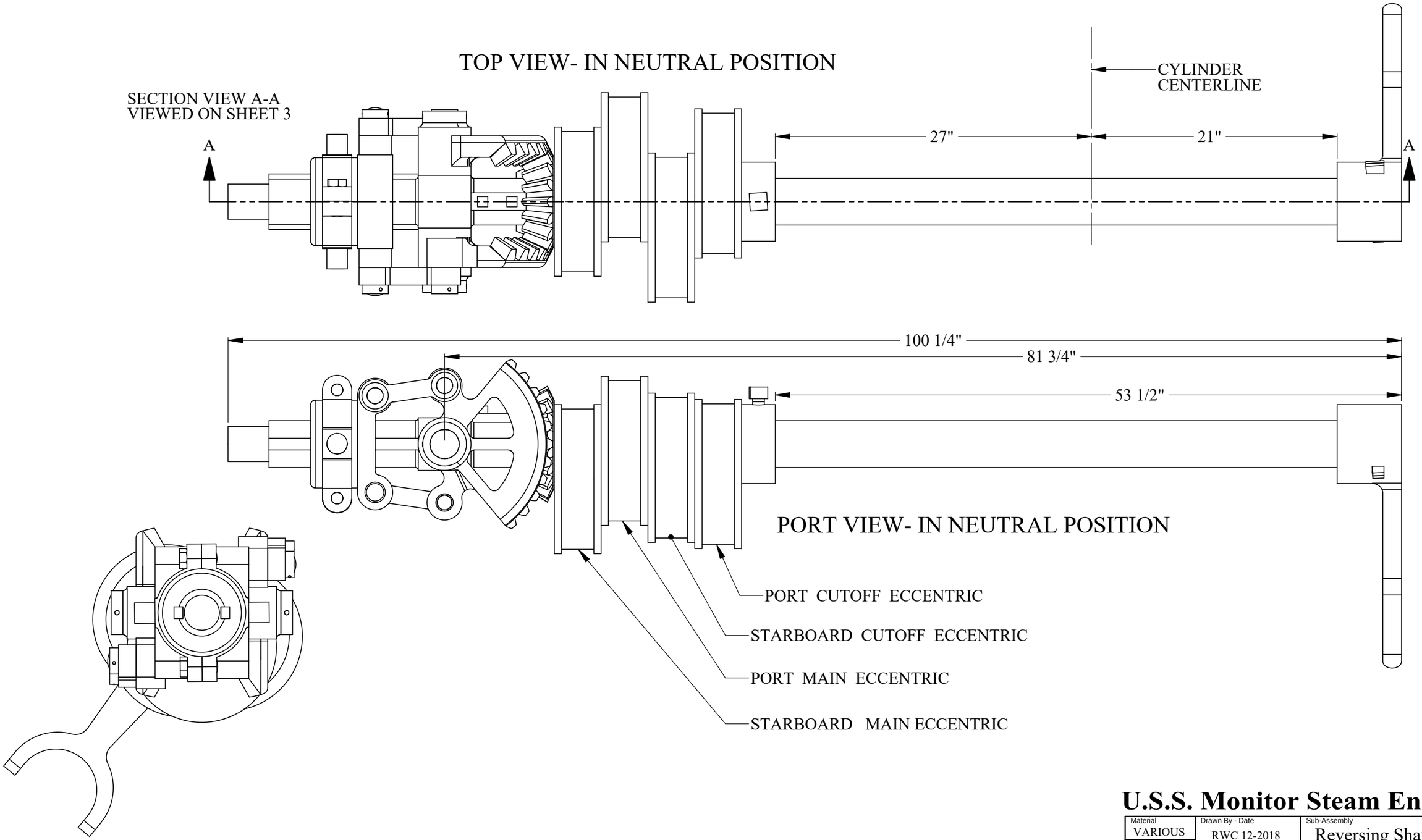

U.S.S. Monitor Steam Engine

Material: VARIOUS	Drawn By - Date: RWC 12-2018	Sub-Assembly: Reversing Shaft
Weight (Lbs): 1020.06	Description: **Reversing Shaft Assembly**	
Scale: 1:8		
Part #: **RS 1**		

© 2018 R.W.Carlstedt

SHEET 1 OF 5

PART NUMBER	DESCRIPTION	QTY.
RS 2	Reversing Shaft	1
RS 3	Reversing Shaft Yoke	1
RS 4	Yoke Taper Pin	1
RS 5	Reversing Shaft Spacer	1
RS 6	Port Cutoff Eccentric	1
RS 7	Starboard Cutoff Eccentric	1
RS 8	Cutoff Eccentrics Key	1
RS 9	Port Main Eccentric	1
RS 10	Port Main Eccentric Key	1
RS 11	Starboard Main Eccentric	1
RS 12	Starboard Main Eccentric Key	2
RS 13	Pinion Gear	1
RS 14	Pinion Gear Key	1
RS 15	Quadrant Gear	2
RS 16	Pinion Gear Shaft	1
RS 17	Quadrant Gear Shaft Collar	2
RS 18	Quadrant Gear Link Pin	2
RS 19	Reversing Link	2
RS 20	Link Pin Collar	4
RS 21	Throwout Block	1
RS 22	Throwout Block Pin	2
RS 23	Throwout Bearing Strap	1
RS 24	Throwout Bearing Strap- Threaded	1
RS 25	Throwout Bearing Key	2
RS 26	Yoke Key	1
L 3	Square Locking Screw 5/8" x 2-1/8"	2
L 6	Square Locking Screw 1" x 1-7/8"	1
B 7	3/4" Bolt x 4-1/2"	2
B 12	1" Bolt x 2-1/2"	2
B 13	1" bolt x 4-5/8"- Special	2
P 2	Steel Pin 3/16" X 1-1/4"	4
P 3	Steel Pin 3/8" X 3-3/4"	2

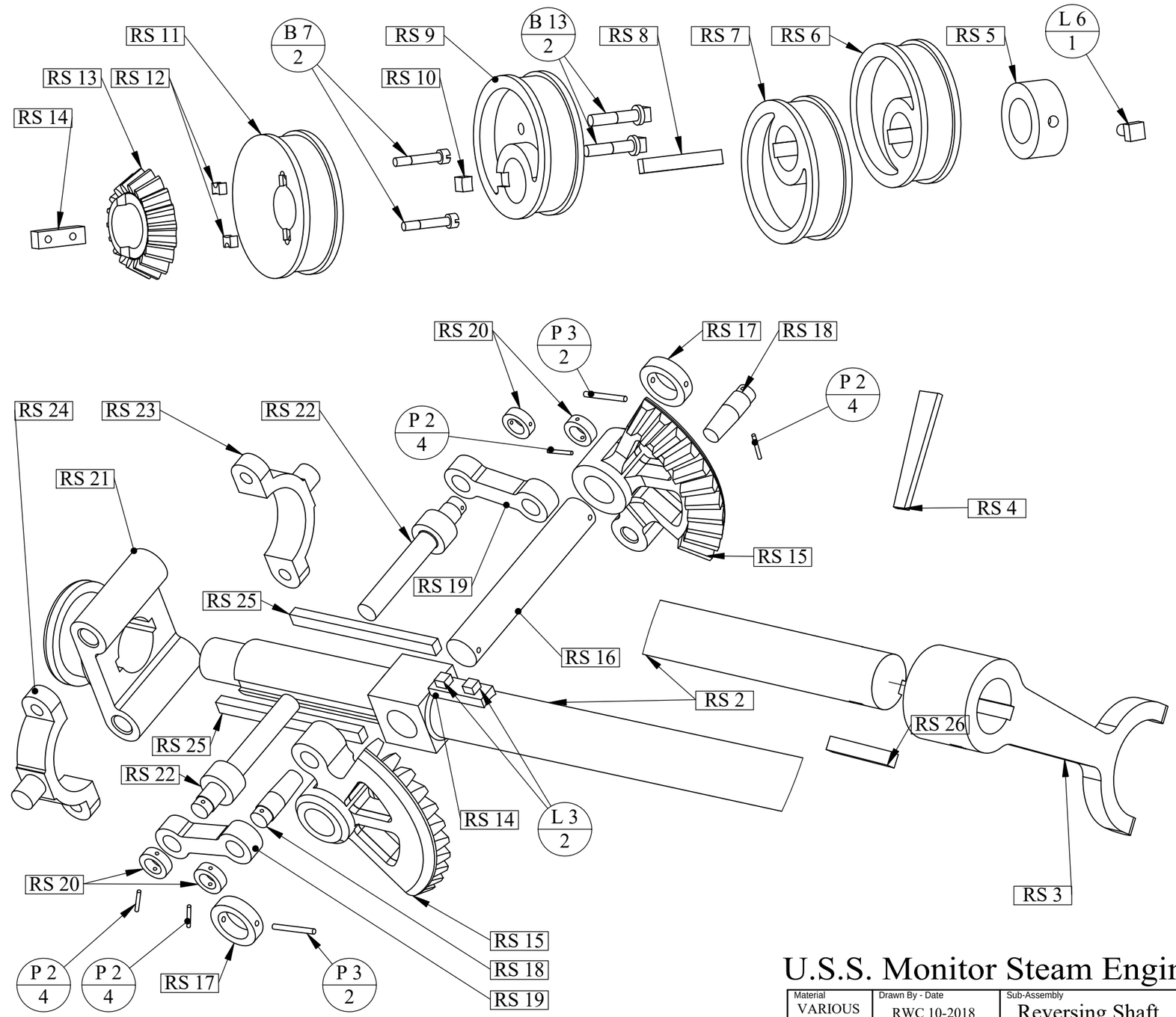

EXPLODED VIEW WITH PART NUMBERS
RS 2 SHAFT IS SECTIONED TO SHOW ALL

© 2018 R.W.Carlstedt

U.S.S. Monitor Steam Engine

Material: VARIOUS	Drawn By - Date: RWC 10-2018	Sub-Assembly: Reversing Shaft
Weight (Lbs): 1020.06	Description: Reversing Shaft Assembly	
Scale: 1:24		
Part #: **RS 1**		SHEET 2 OF 5

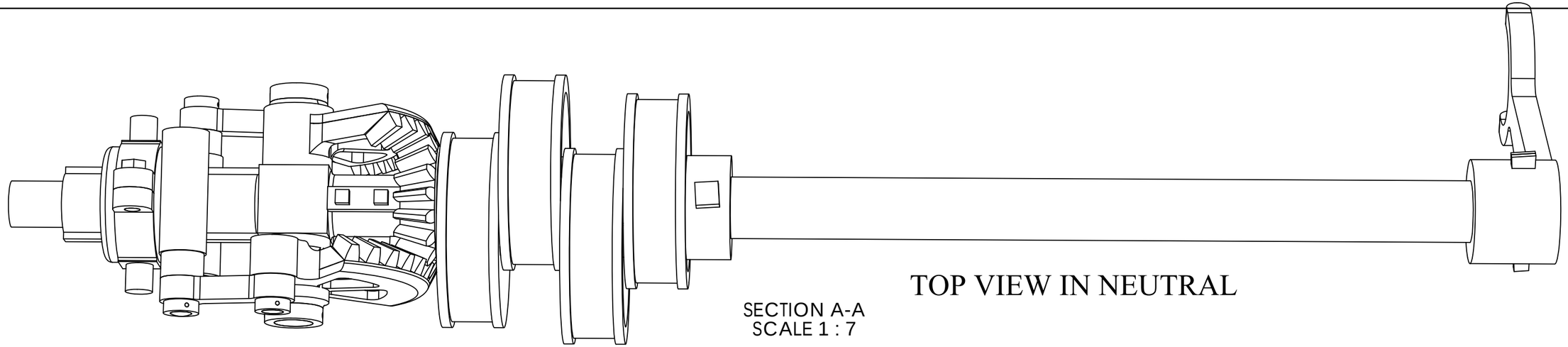

TOP VIEW IN NEUTRAL

SECTION A-A
SCALE 1 : 7

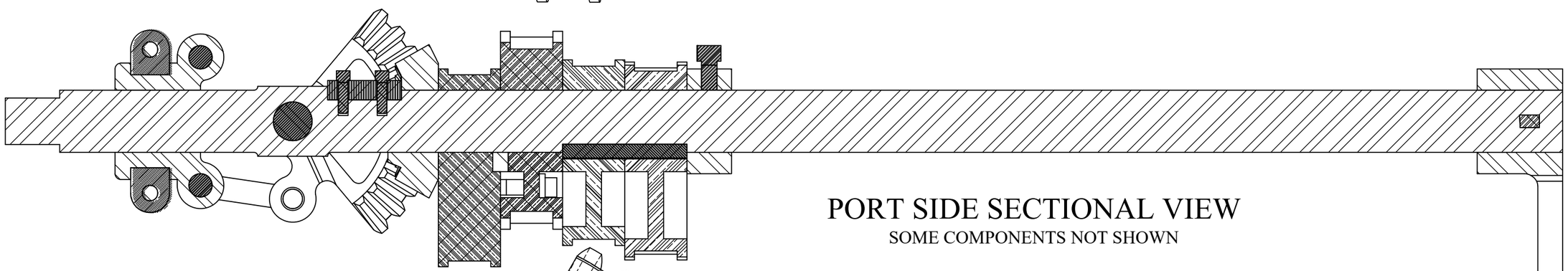

PORT SIDE SECTIONAL VIEW
SOME COMPONENTS NOT SHOWN

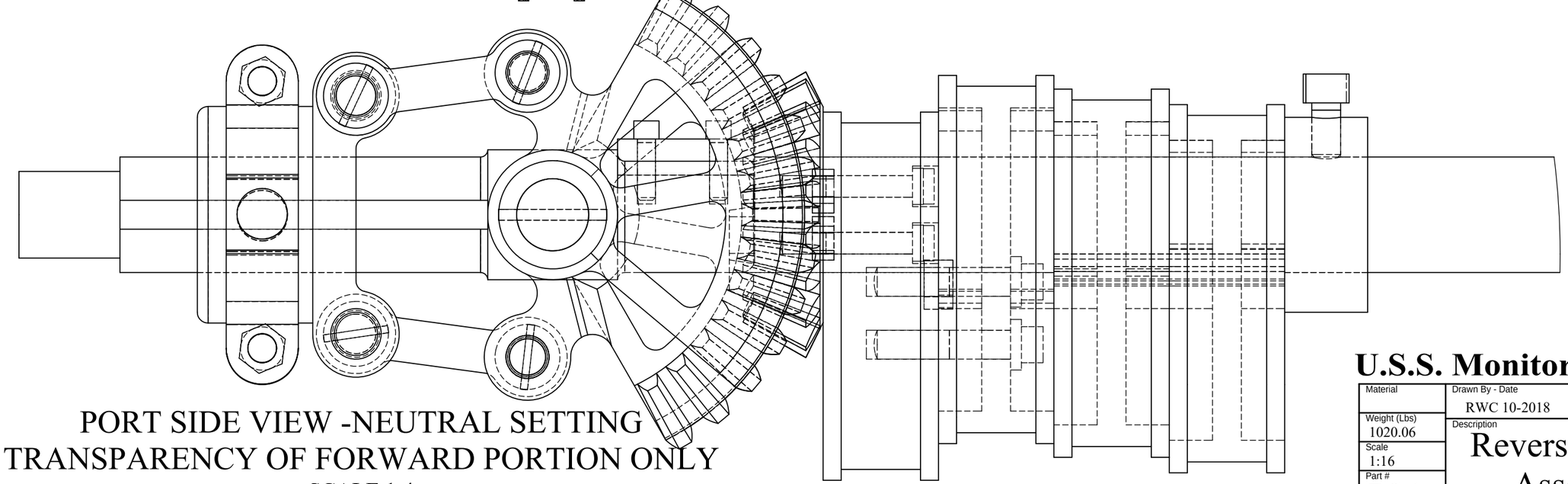

PORT SIDE VIEW -NEUTRAL SETTING
TRANSPARENCY OF FORWARD PORTION ONLY
SCALE 1:4

© 2018 R.W.Carlstedt

U.S.S. Monitor Steam Engine

Material	Drawn By - Date: RWC 10-2018	Sub-Assembly: Reversing Shaft
Weight (Lbs): 1020.06	Description: Reversing Shaft Assembly	
Scale: 1:16		
Part #: **RS 1**		Sheet 3 OF 5

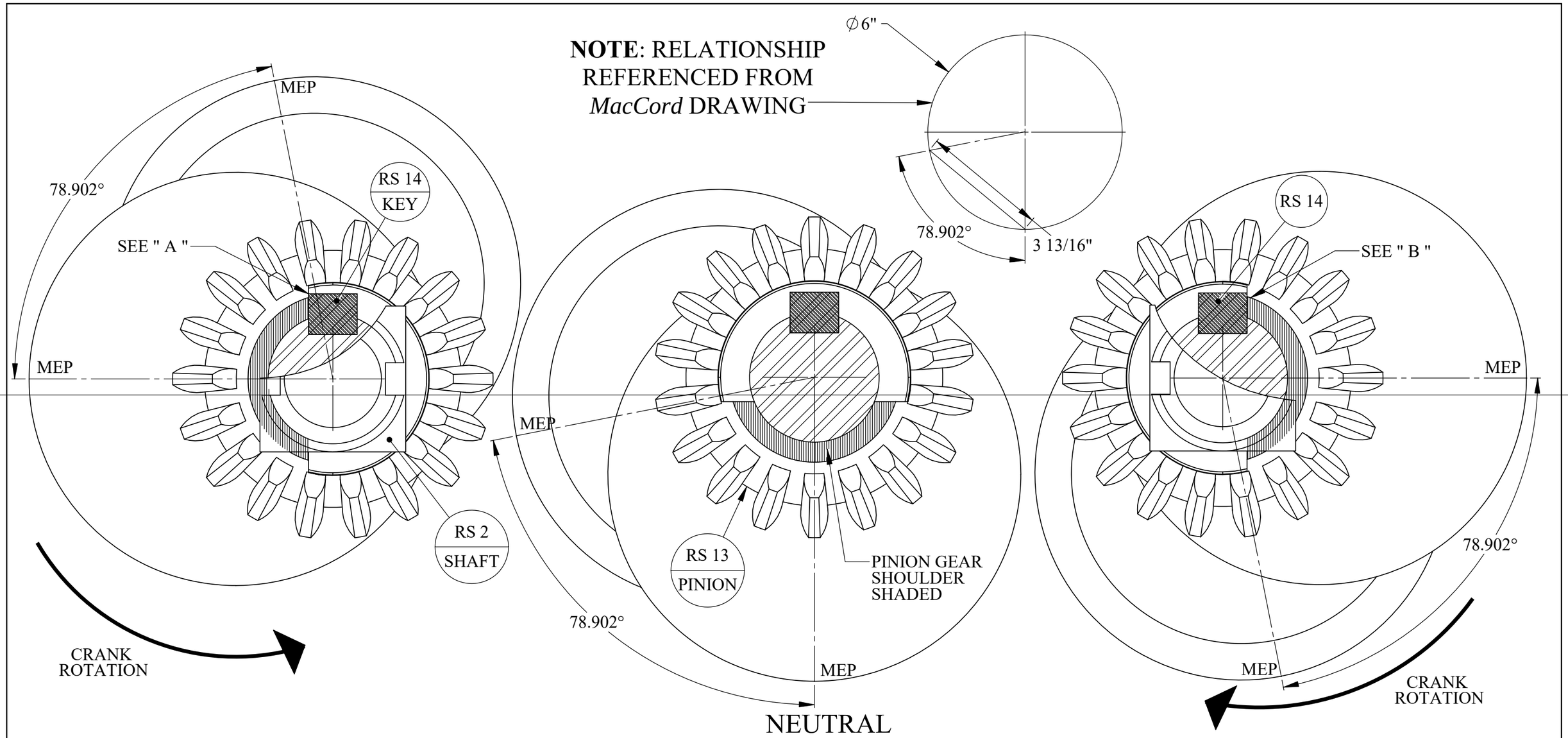

MAIN VALVE ECCENTRIC RELATIONSHIPS

NOTE A:
WHEN THE PINION GEAR IS ROTATED CLOCKWISE,
THE SHOULDER OF THE GEAR STOPS AT THE KEY (RS 14)
WHICH THEN RESULTS IN A COUNTER-CLOCKWISE ROTATION
OF THE MAIN CRANKSHAFT. THE "KEY' DRIVES THE ECCENTRICS

NOTE B:
WHEN THE PINION GEAR IS ROTATED COUNTER- CLOCKWISE,
THE SHOULDER OF THE GEAR STOPS AT THE KEY (RS 14)
WHICH THEN RESULTS IN A CLOCKWISE ROTATION OF THE
MAIN CRANKSHAFT. THE "KEY' DRIVES THE ECCENTRICS

MEP= MAXIMUM ECCENTRIC POINT

NOTE:
RS 2 - REVERSING SHAFT- IS SECTIONED
IN THESE VIEWS TO DISPLAY THE
RELATIONSHIPS OF RS 13 & RS 14

© 2018 R.W.Carlstedt

U.S.S. Monitor Steam Engine

Material	Drawn By - Date: RWC 12-2018	Sub-Assembly: Reversing Shaft
Weight (Lbs)	Description: Reversing Shaft Assembly	
Scale: 1:3		
Part #: **RS 1**		Sheet 4 of 5

CUTOFF ECCENTRIC AND YOKE LOCATIONS -ONLY !

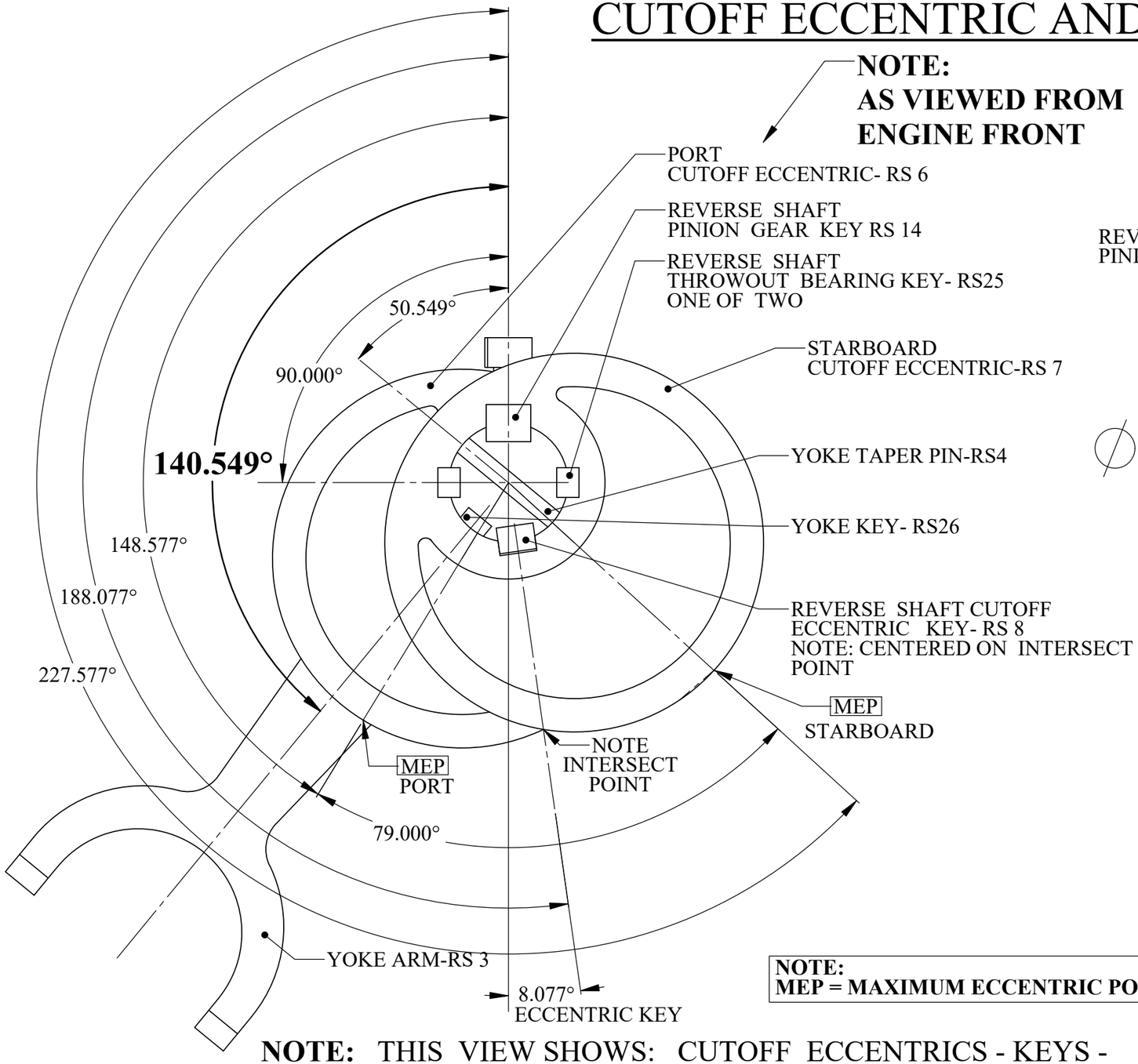

NOTE:
MEP = MAXIMUM ECCENTRIC POINT

HEAVY LINES SHOW
LENGTHS ACCORDING
TO ***Charles MacCord***
DRAWING DATA

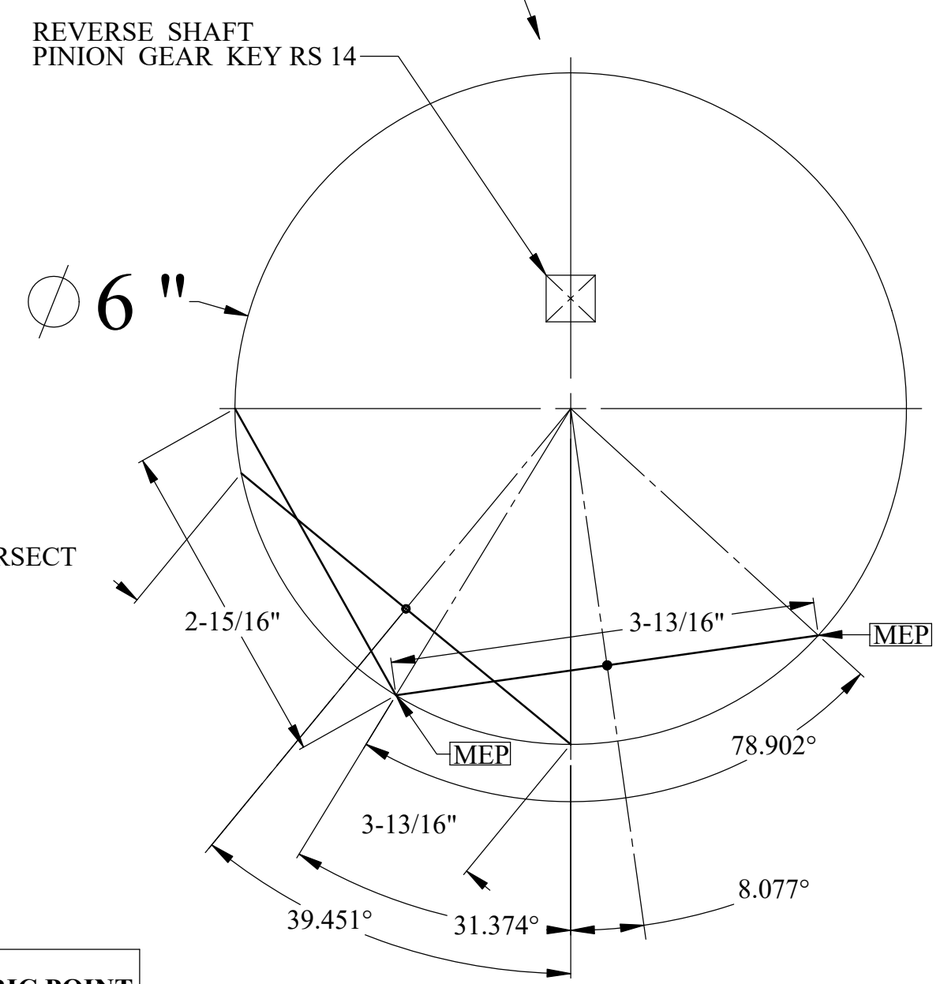

NOTE: THIS VIEW SHOWS: CUTOFF ECCENTRICS - KEYS - AND OTHER ANGULAR RELATIONSHIPS WHICH REMAIN CONSTANT- REGUARDLESS OF REVERSING SHAFT DIRECTION

© 2018 R.W.Carlstedt

U.S.S. Monitor Steam Engine

Material	Drawn By - Date	Sub-Assembly
	RWC 12-2018	Reversing Shaft
Weight (Lbs) 223.47	Description	
Scale 1: 4	Reversing Shaft Assembly	
Part # **RS 1**		Sheet 5 of 5

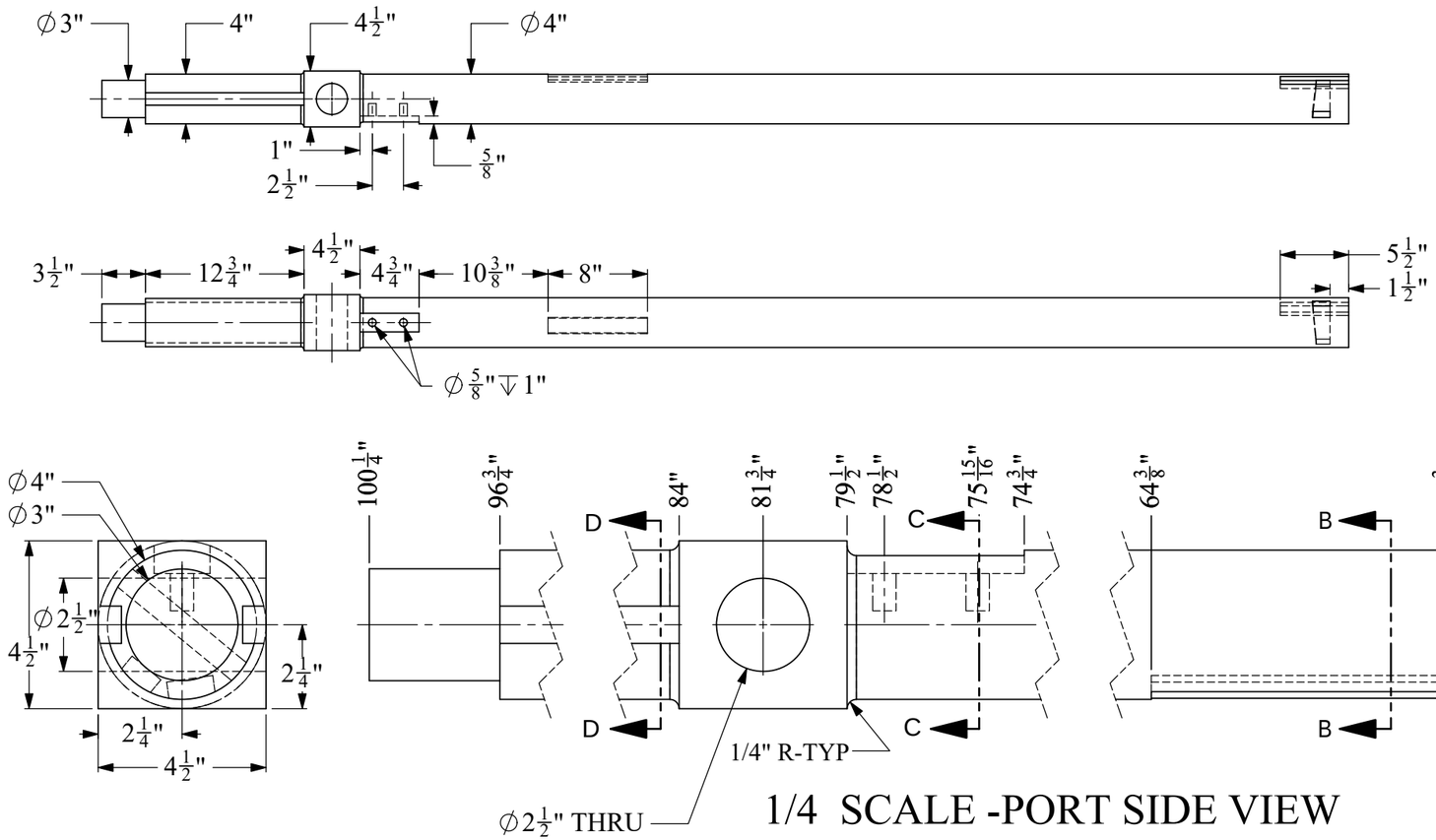

1/4 SCALE -PORT SIDE VIEW

VIEW OF SHAFT END ROTATED 50.549 DEGREES FOR TAPERED HOLE AND YOKE KEYWAY DIMS

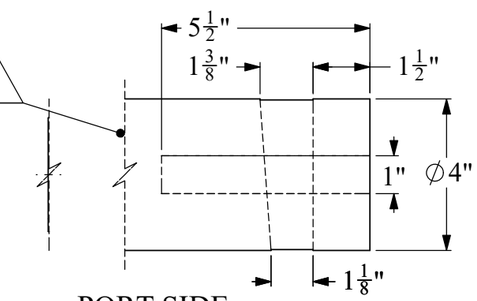

PORT SIDE

SIDE VIEW - ROTATED
↶ 50.549° FOR TRUE VIEW
SCALE 1 : 4

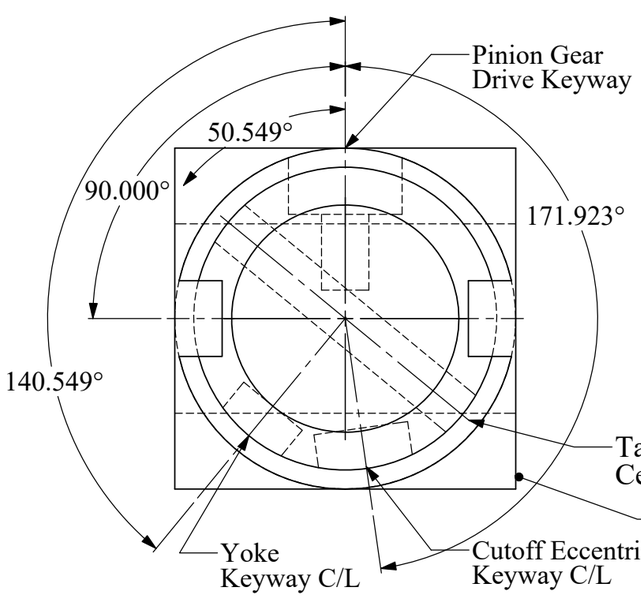

SECTION D-D
SCALE 1 : 4

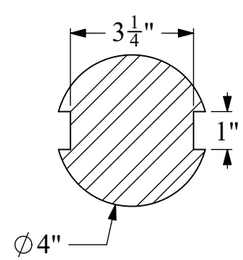

SECTION C-C
SCALE 1 : 4

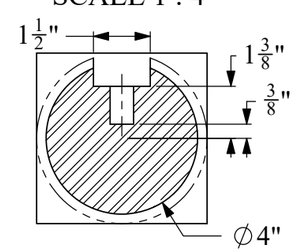

Pinion Gear Keyway
& Screw Locations

SECTION B-B
SCALE 1 : 4

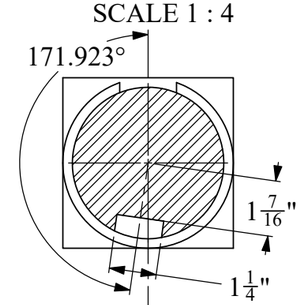

Cutoff Eccentric
Keyway

SECTION A-A
SCALE 1 : 4

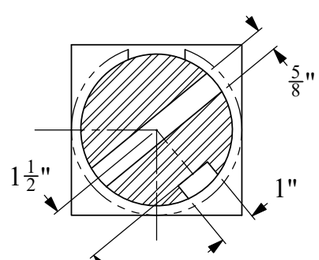

Yoke Keyway &
Taper Pin Location

ALL ABOVE SECTIONS VIEWS ARE LOOKING FORWARD

U.S.S. Monitor Steam Engine

Material: STEEL	Drawn By - Date: RWC 12-2018	Sub-Assembly: Reversing Shaft
Weight (Lbs): 350.69	Description: Reversing Shaft	
Scale: 1:12		
Part #: **RS 2**		

© 2018 R.W.Carlstedt

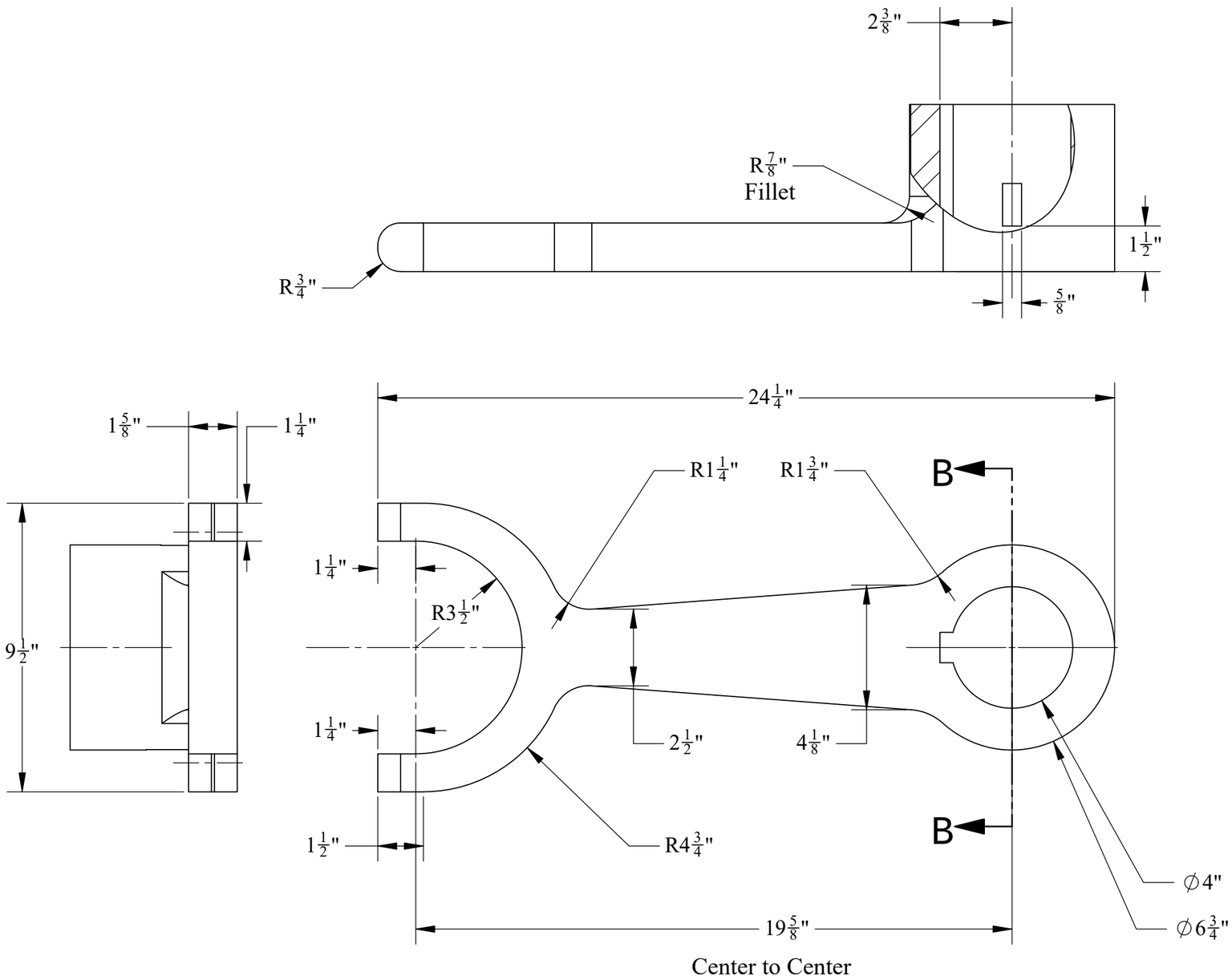

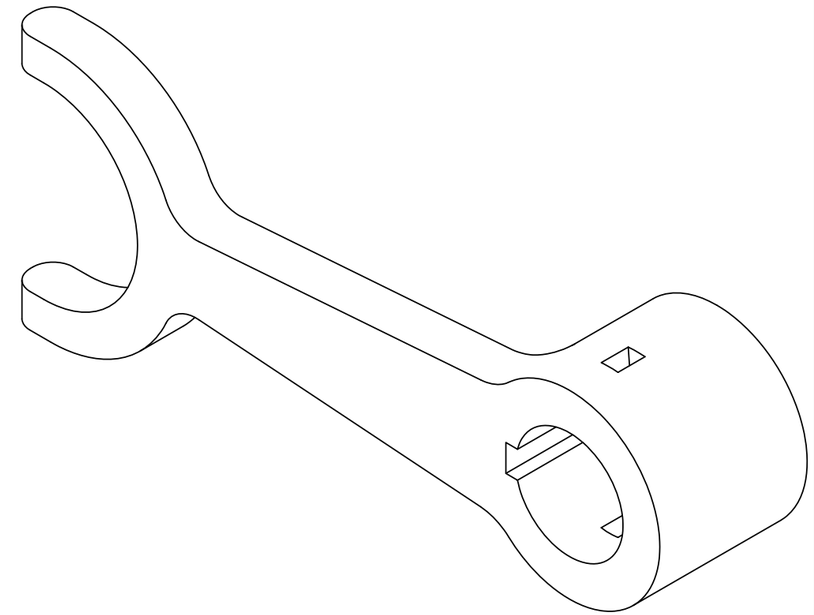

SECTION B-B

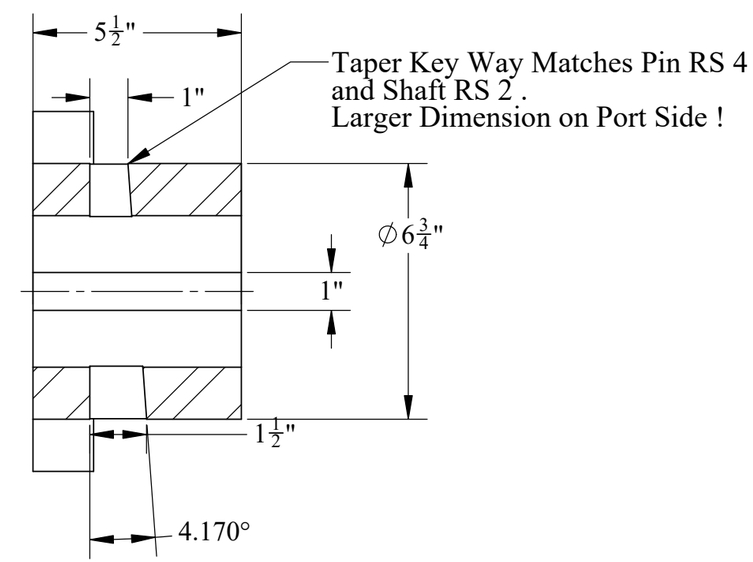

U.S.S. Monitor Steam Engine

Material: STEEL	Drawn By - Date: RWC 10-2018	Sub-Assembly: Reversing Shaft
Weight (Lbs): 62.54	Description: Reversing Shaft Yoke	
Scale: 1:4		
Part #: **RS 3**		

© 2018 R.W.Carlstedt

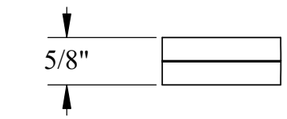

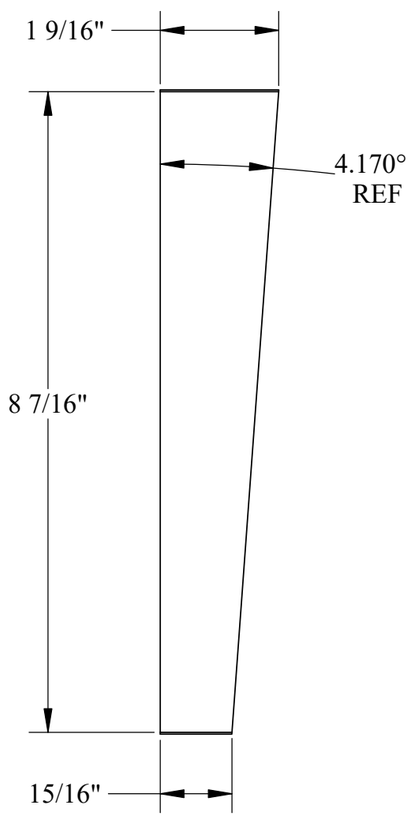

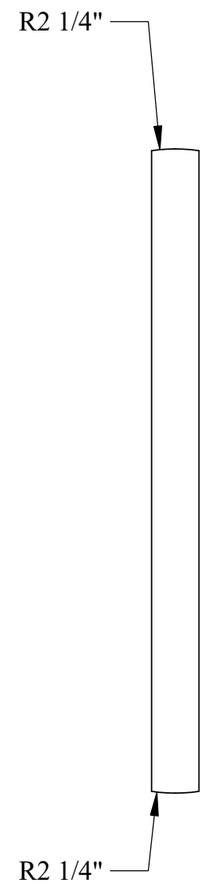

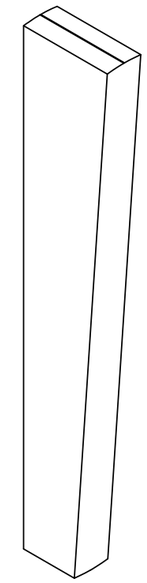

U.S.S. Monitor Steam Engine

Material: STEEL	Drawn By - Date: RWC 10-2018	Sub-Assembly: Reversing Shaft
Weight (Lbs): 1.90	Description: Yoke Taper Pin	
Scale: 1:2		
Part #: **RS 4**		

© 2018 R.W.Carlstedt

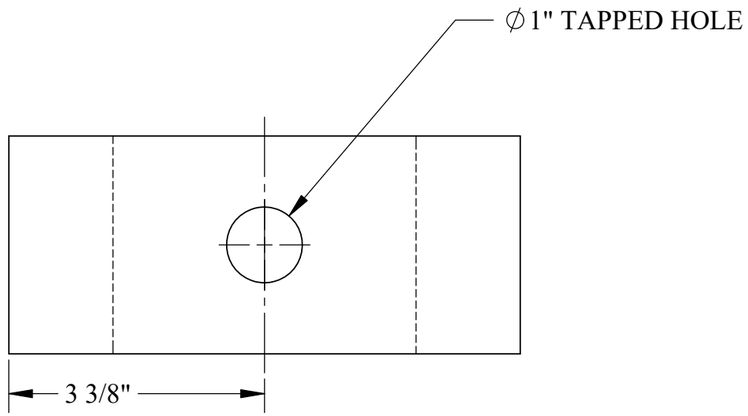

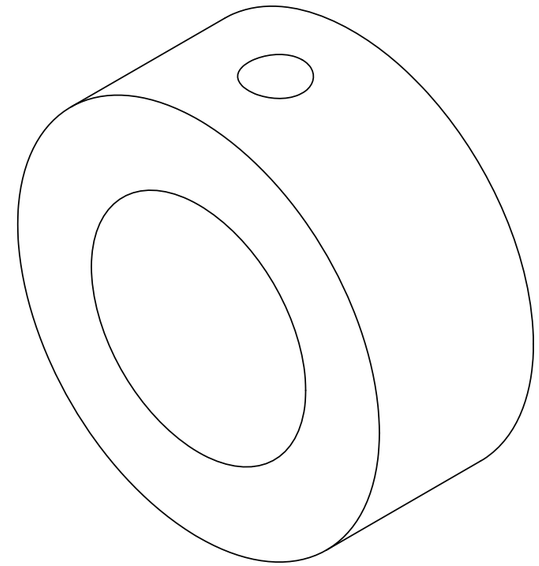

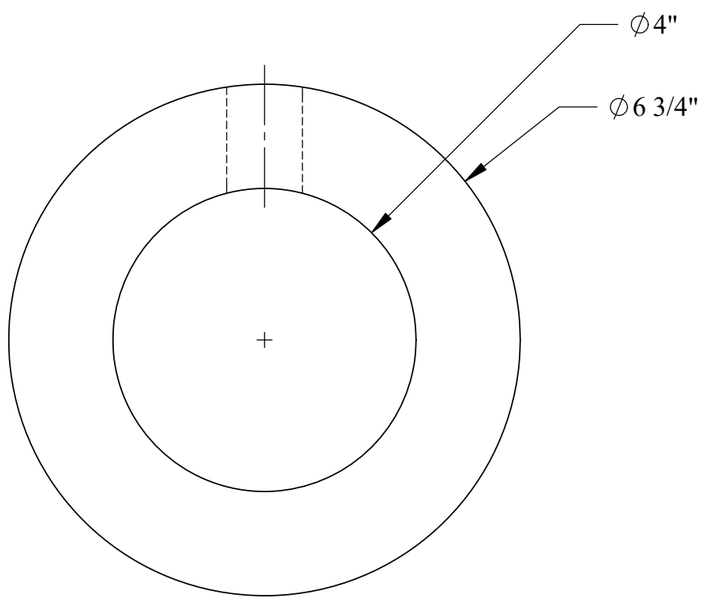

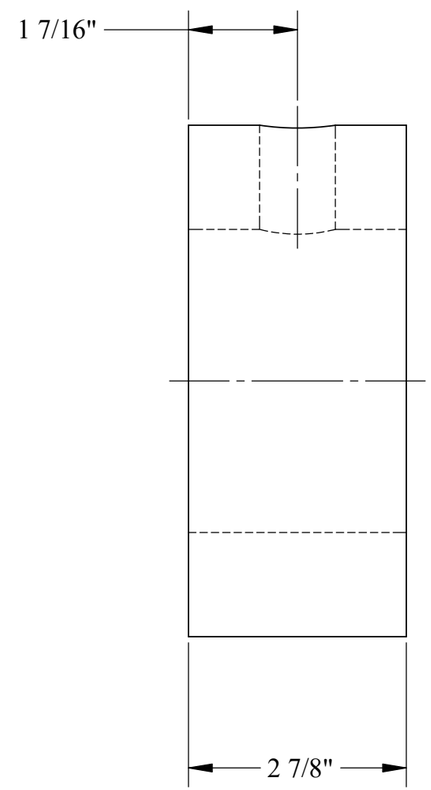

U.S.S. Monitor Steam Engine

Material: STEEL	Drawn By - Date: RWC 10-2018	Sub-Assembly: Reversing Shaft
Weight (Lbs): 18.74	Description: Reversing Shaft Spacer	
Scale: 1:4		
Part #: **RS 5**		

© 2018 R.W.Carlstedt

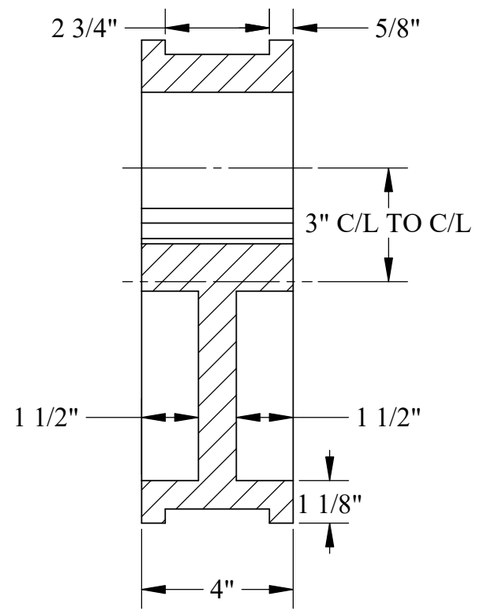

SECTION D-D

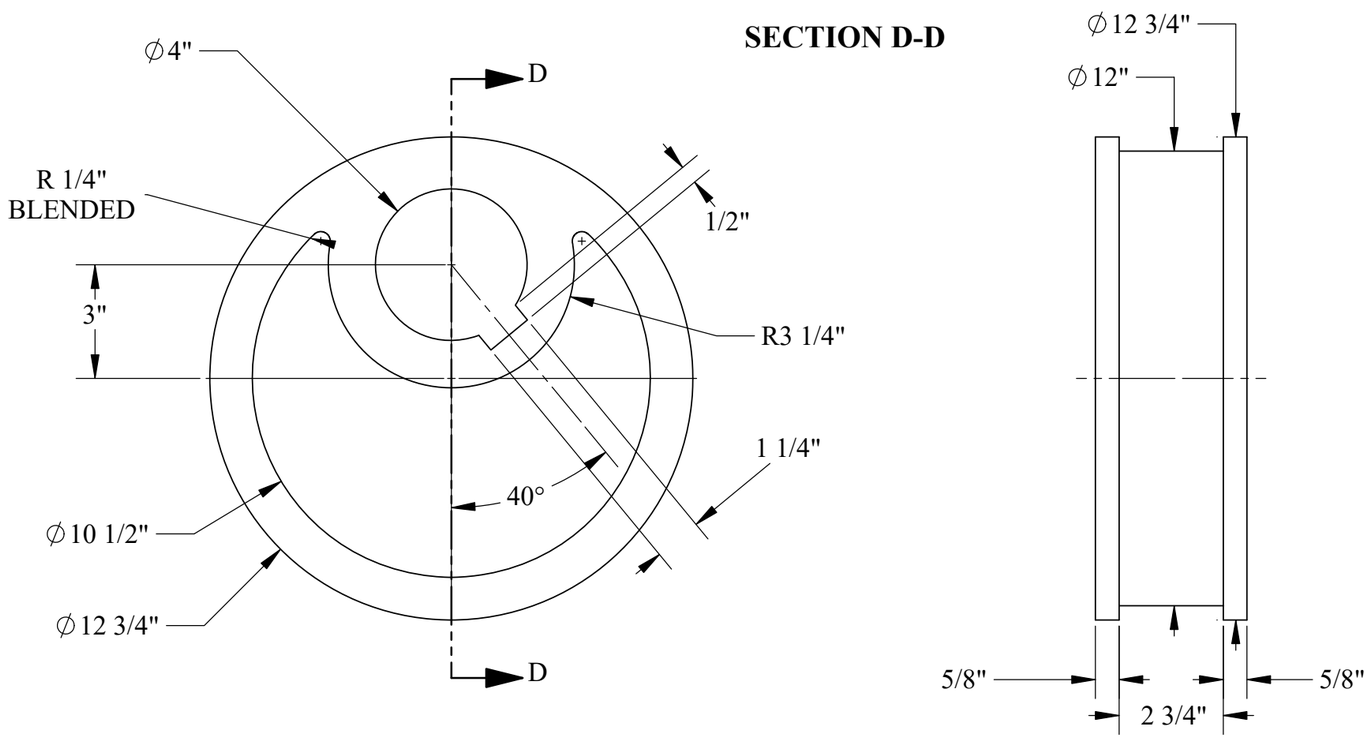

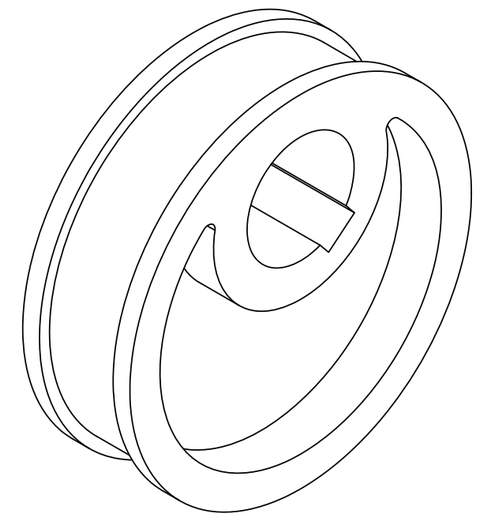

NOTE:
THE PORT CUTOFF ECCENTRIC AND THE STARBOARD CUTOFF ECCENTRIC ARE IDENTICAL TO EACH OTHER, BUT THEY ARE INSTALLED WITH DIFFERENT ORIENTATIONS ON THE SHAFT

U.S.S. Monitor Steam Engine

Material	Drawn By - Date	Sub-Assembly
Cast Iron	RWC 10-2018	Reversing Shaft
Weight (Lbs) 63.79	Description	
Scale 1:4	Port Cutoff Eccentric	
Part # **RS 6**		

© 2018 R.W.Carlstedt

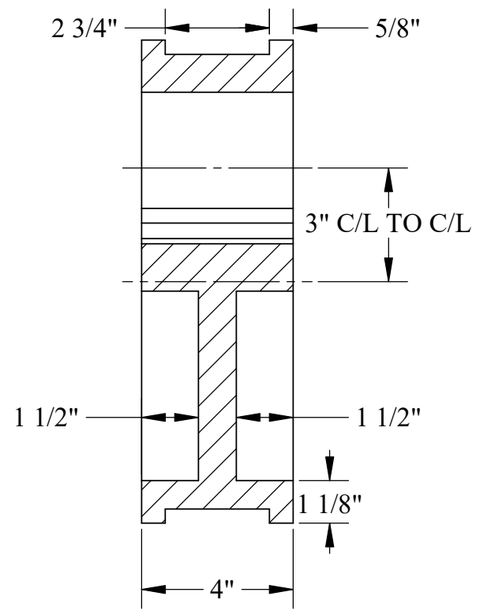

SECTION D-D

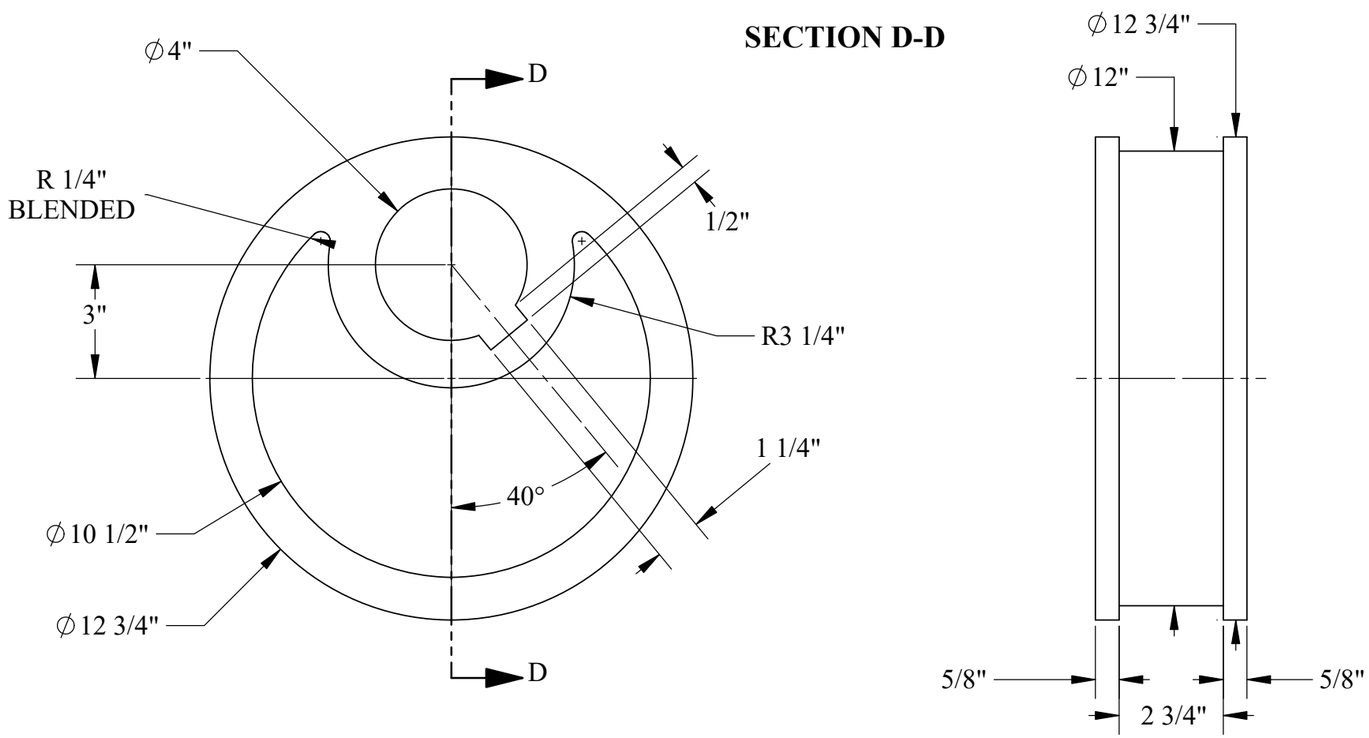

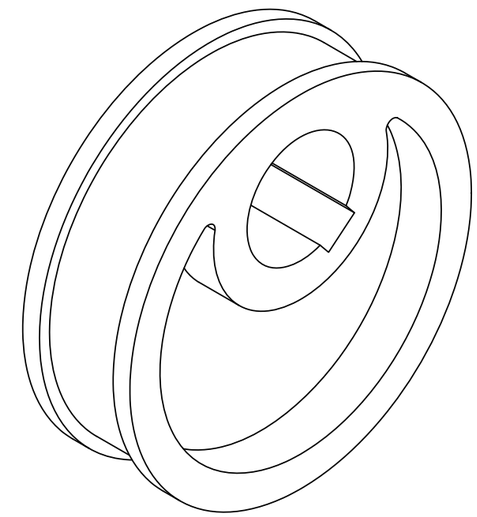

NOTE:
THE PORT CUTOFF ECCENTRIC AND THE STARBOARD CUTOFF ECCENTRIC ARE IDENTICAL TO EACH OTHER, BUT THEY ARE INSTALLED WITH DIFFERENT ORIENTATIONS ON THE SHAFT

U.S.S. Monitor Steam Engine

Material: Cast Iron	Drawn By - Date: RWC 10-2018	Sub-Assembly: Reversing Shaft
Weight (Lbs): 63.79	Description: Starboard Cutoff Eccentric	
Scale: 1:4		
Part #: **RS 7**		

© 2018 R.W.Carlstedt

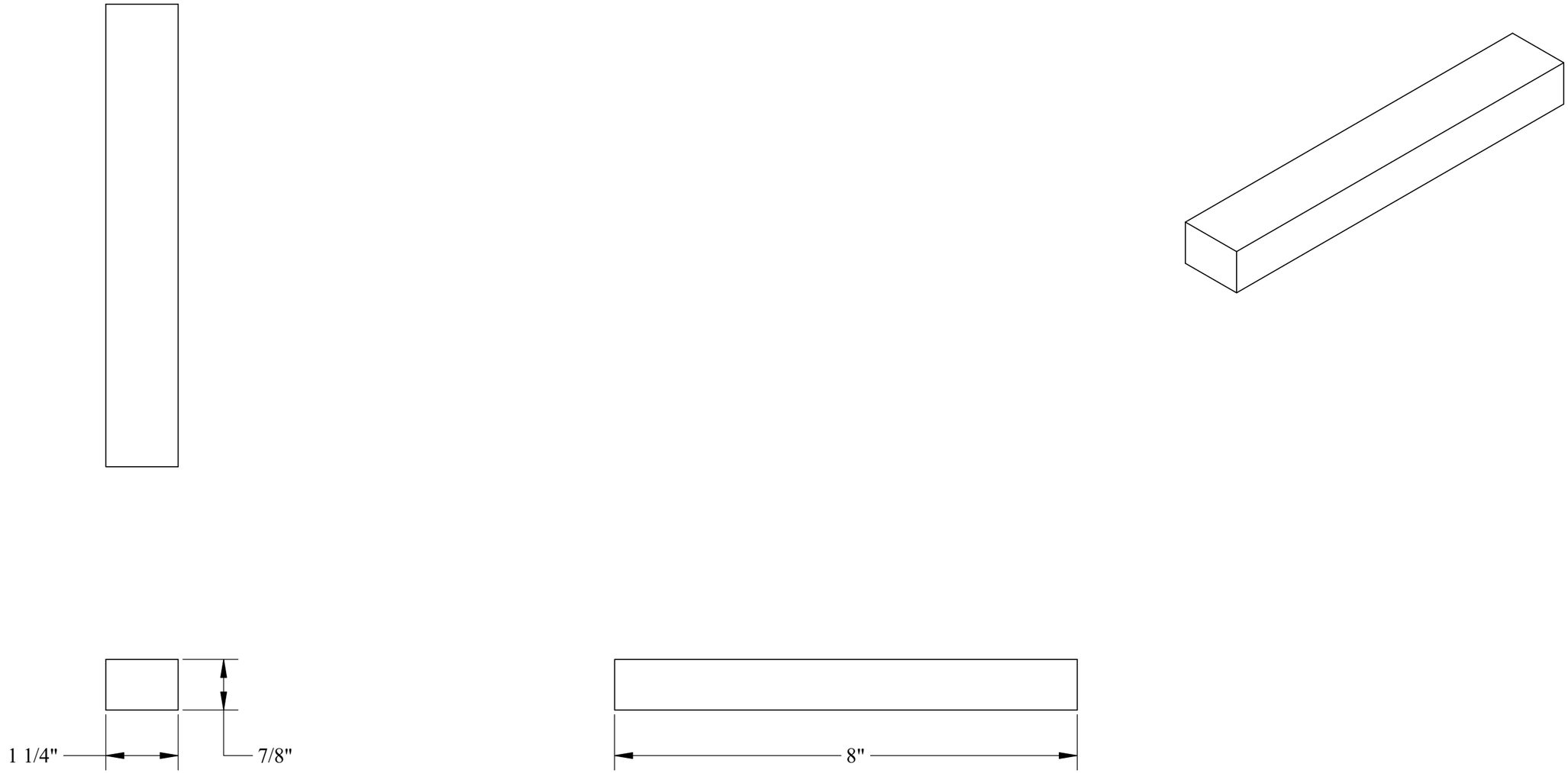

U.S.S. Monitor Steam Engine

Material: STEEL	Drawn By - Date: RWC 10-2018	Sub-Assembly: Reversing Shaft
Weight (Lbs): 2.50	Description: Cutoff Eccentrics Key	
Scale: 1:2		
Part #: **RS 8**		

© 2018 R.W.Carlstedt

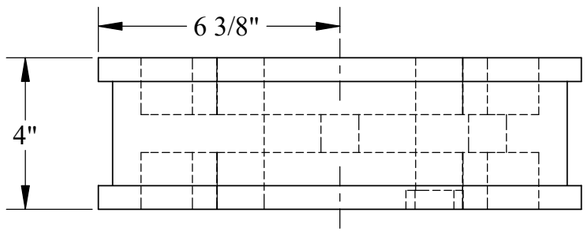

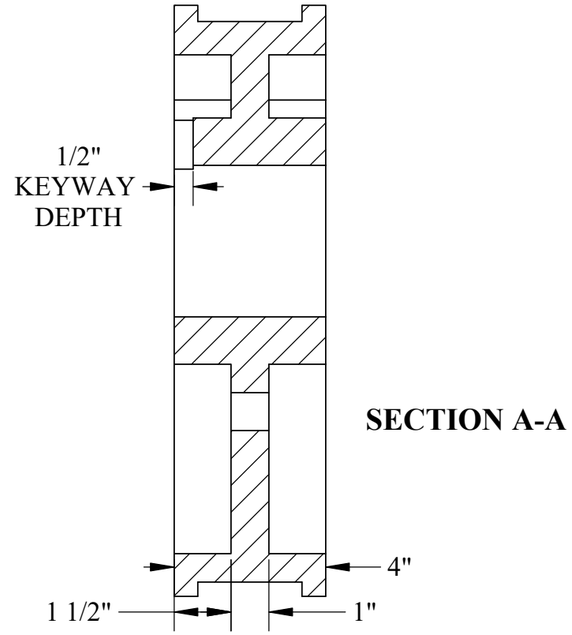

SECTION A-A

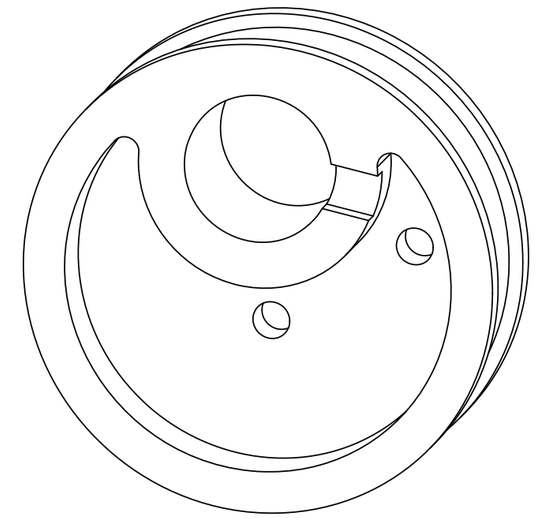

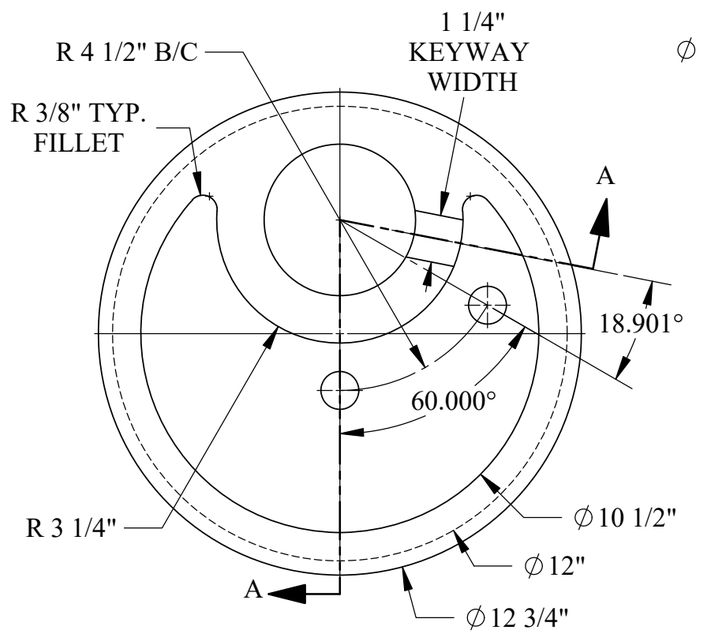

LOOKING AFT

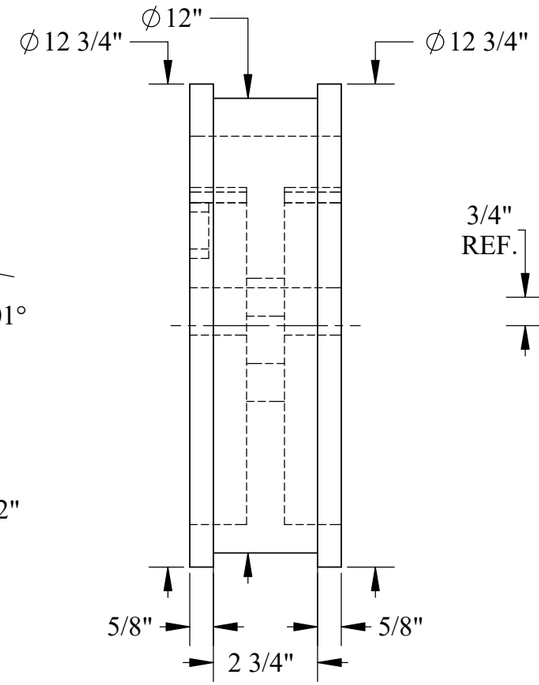

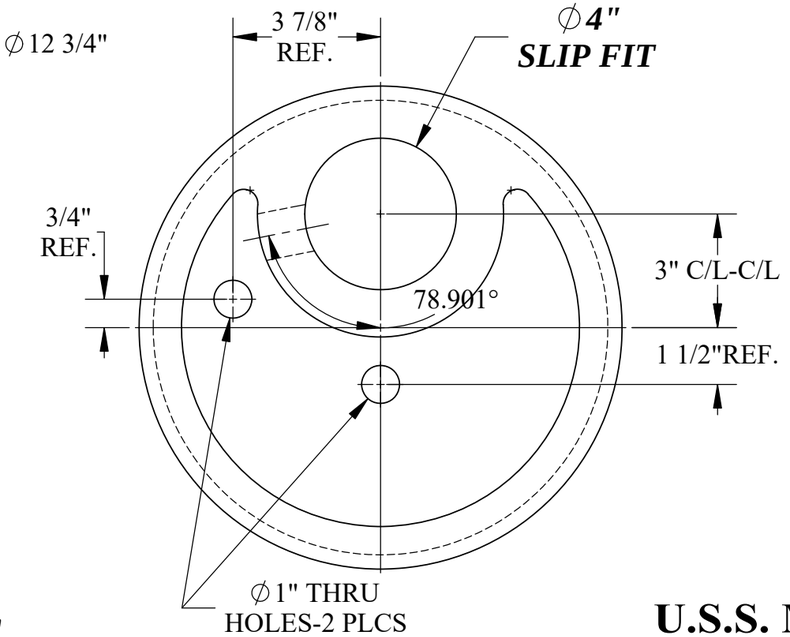

U.S.S. Monitor Steam Engine

Material	Drawn By - Date	Sub-Assembly
Cast Iron	RWC 12-2018	Reversing Shaft
Weight (Lbs) 63.95	Description	
Scale 1:4	Port Main Eccentric	
Part # **RS 9**		

© 2018 R.W.Carlstedt

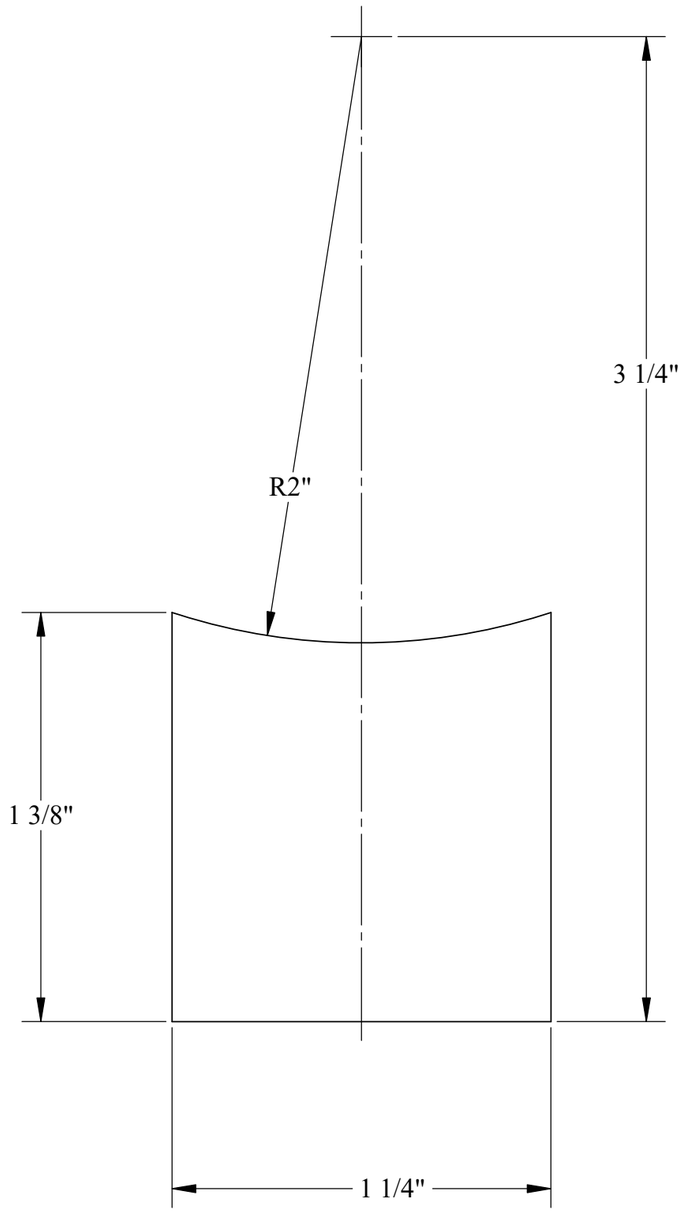

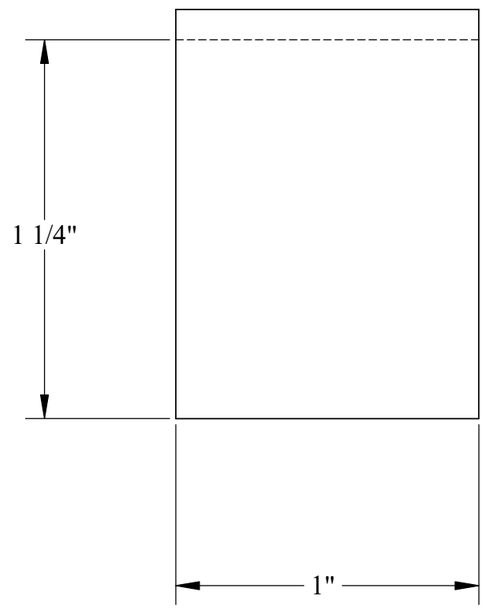

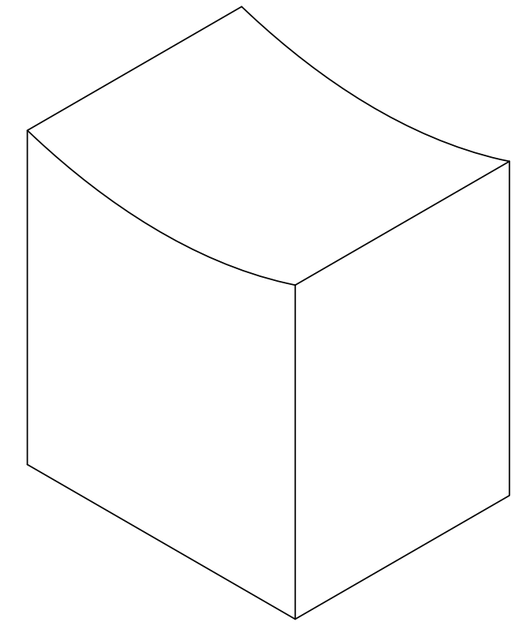

U.S.S. Monitor Steam Engine

Material: STEEL	Drawn By - Date: RWC 10-2018	Sub-Assembly: Reversing Shaft
Weight (Lbs): 0.46	Description: Port Main Eccentric Key	
Scale: 2:1		
Part #: **RS 10**		

© 2018 R.W.Carlstedt

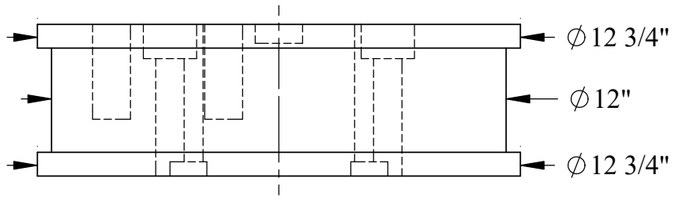

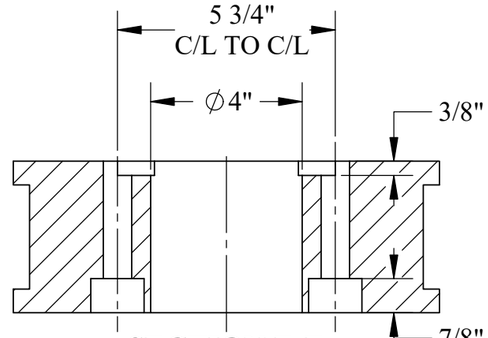

SECTION E-E
KEYWAY DETAIL

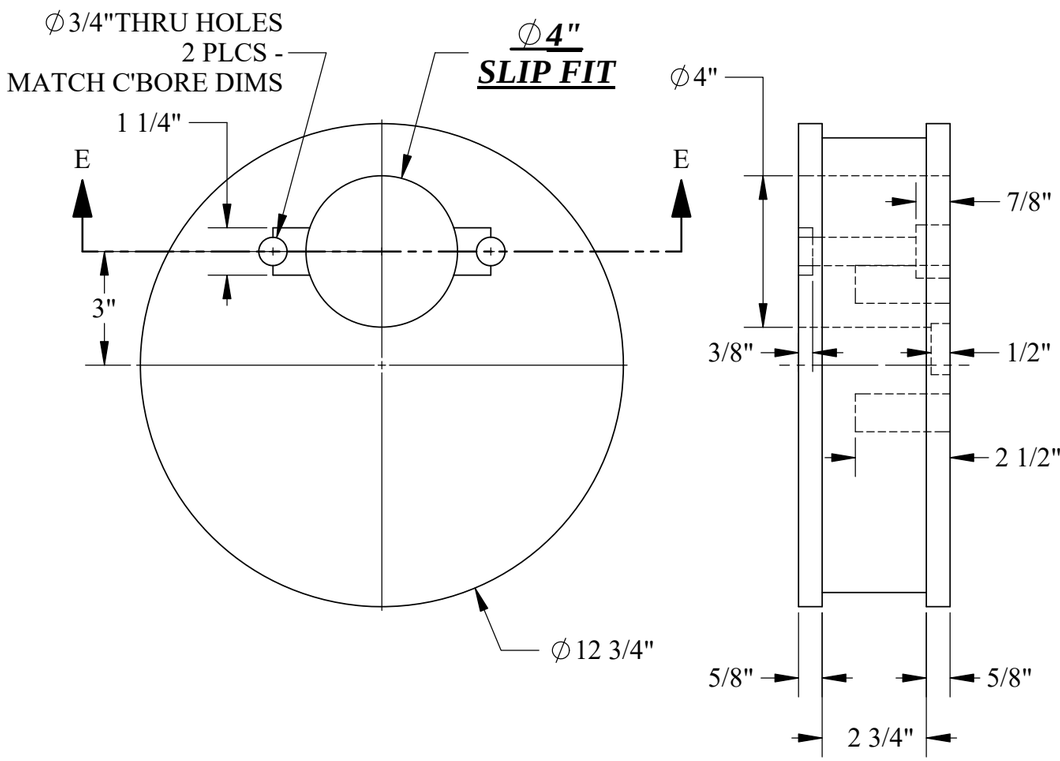

LOOKING AFT
FROM FORWARD

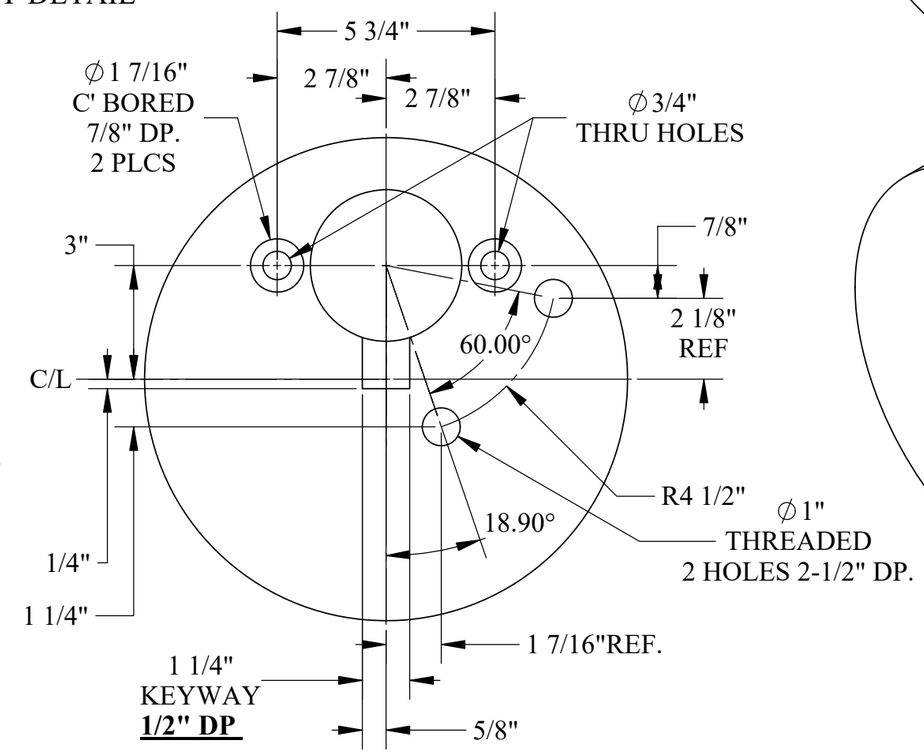

LOOKING FORWARD
FROM AFT.

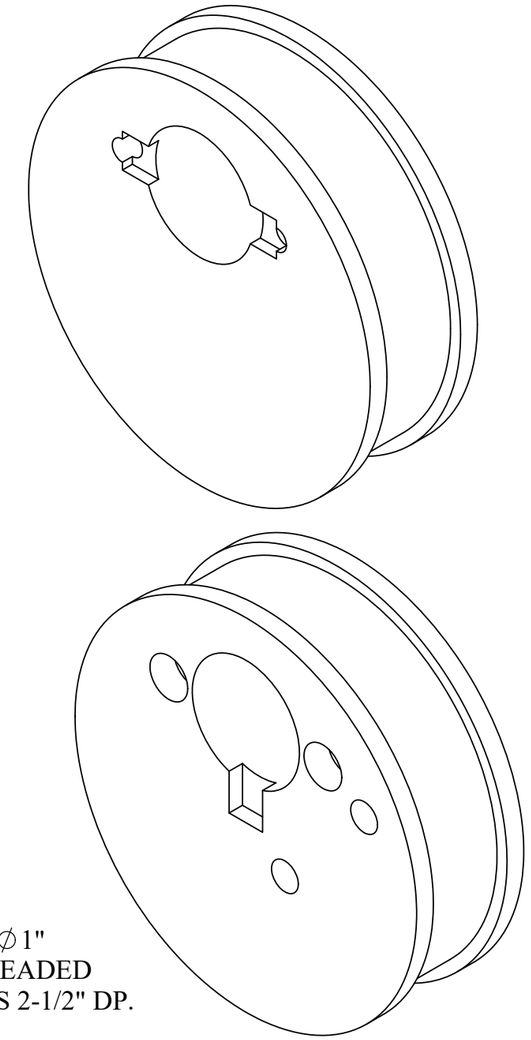

U.S.S. Monitor Steam Engine

Material: Cast Iron	Drawn By - Date: RWC 12 -2018	Sub-Assembly: Reversing Shaft
Weight (Lbs): 106.49	Description: Starboard Main Eccentric	
Scale: 1:4		
Part #: **RS 11**		

© 2018 R.W.Carlstedt

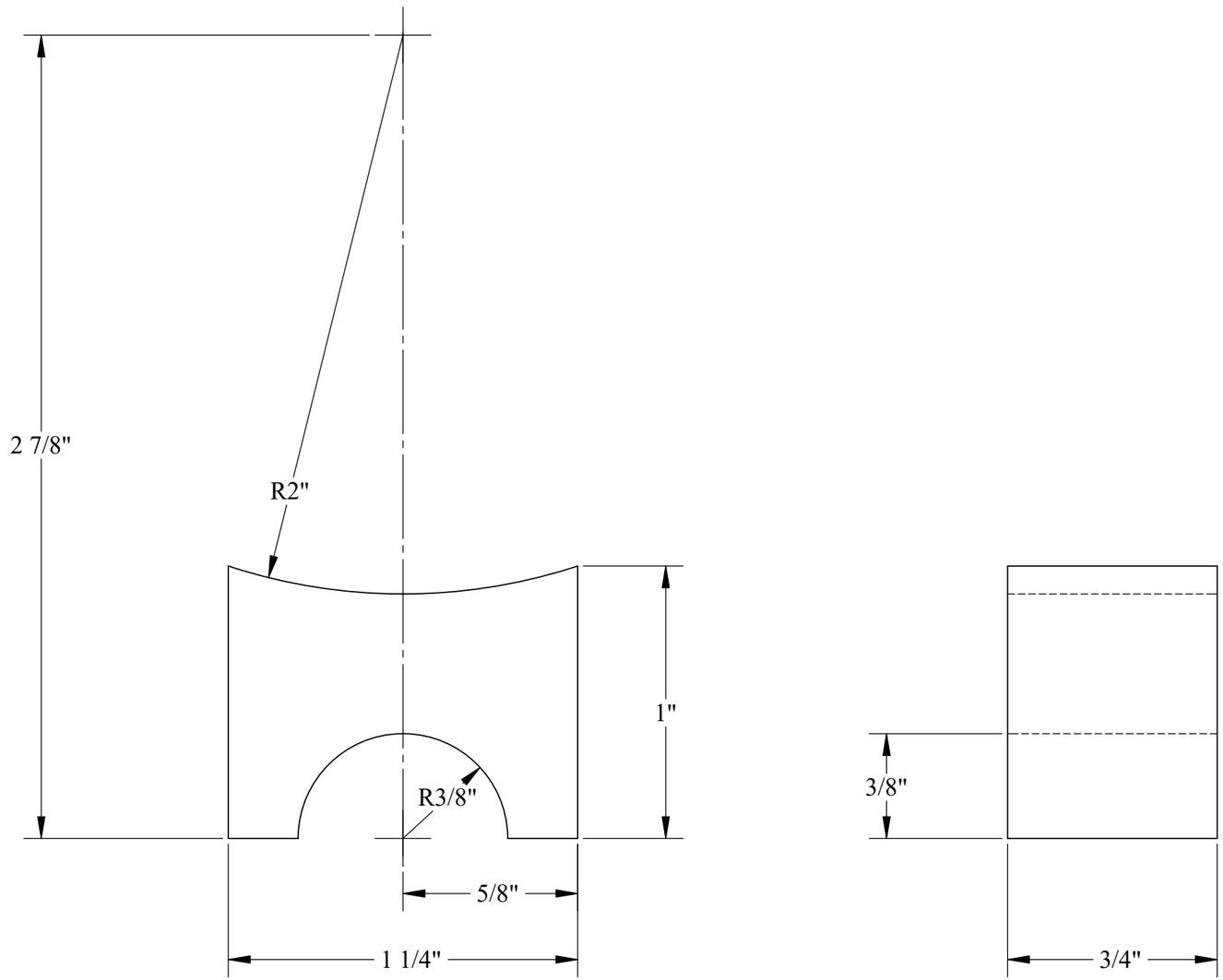

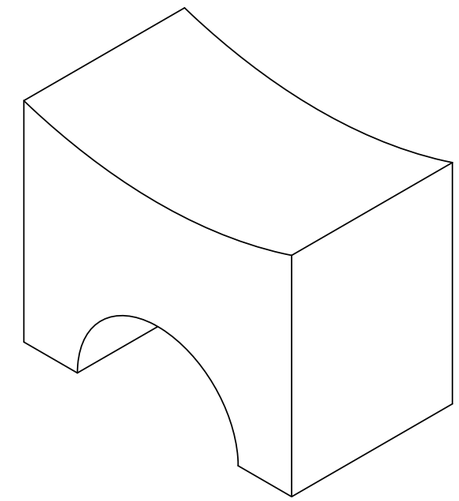

U.S.S. Monitor Steam Engine

Material: STEEL	Drawn By - Date: RWC 10-2018	Sub-Assembly: Reversing Shaft
Weight (Lbs): 0.20	Description: Starboard Main Eccentric Key	
Scale: 2:1		
Part #: **RS 12**		

© 2018 R.W.Carlstedt

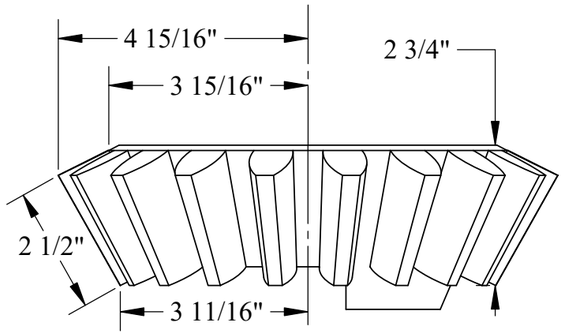

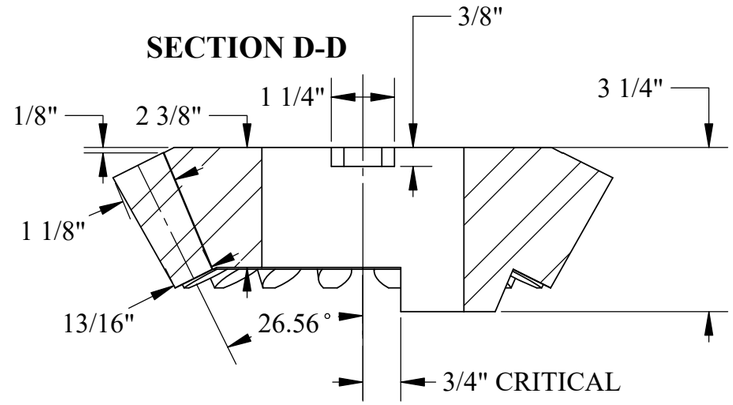

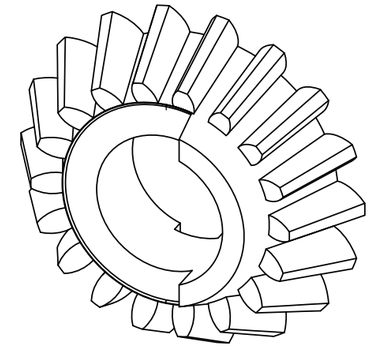

SCALE: 1 : 4

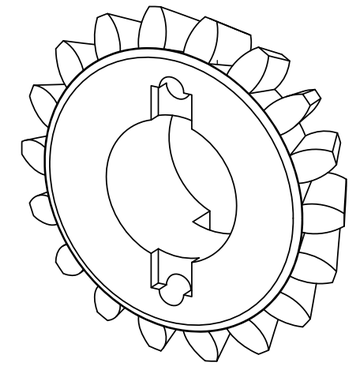

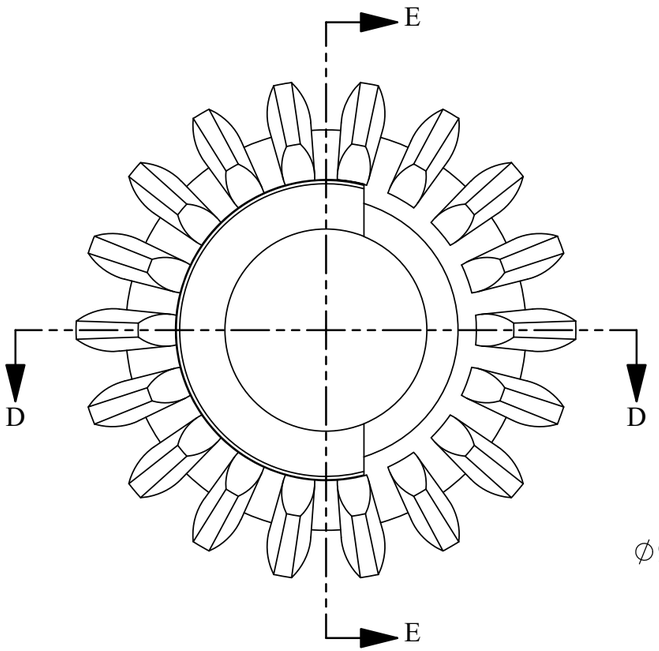

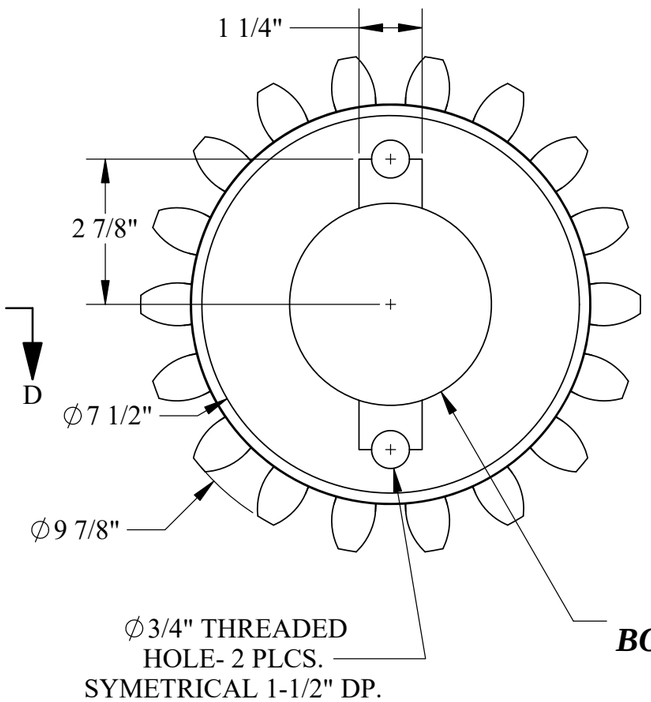

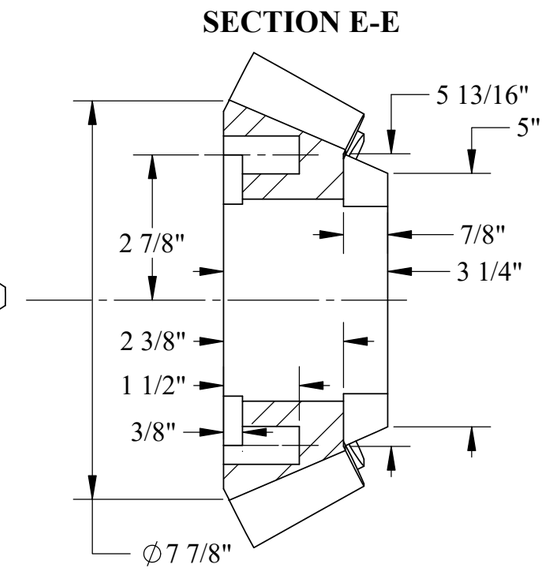

GEAR DATA

PD- PITCH DIAMETER = 9"
ADDENDUM+DEDENDUM = 1-1/8"
WD- WORKING DEPTH = 1"
ANGLE OF BEVEL GEAR = 26.56 DEG.
P - DIAMETRAL PITCH = 2 (18/9=2)
NUMBER OF TEETH = 18

U.S.S. Monitor Steam Engine

Material: STEEL	Drawn By - Date: RWC 10-2018	Sub-Assembly: Reversing Shaft
Weight (Lbs): 26.27	Description: Pinion Gear	
Scale: 1:3		
Part #: RS 13		

© 2018 R.W.Carlstedt

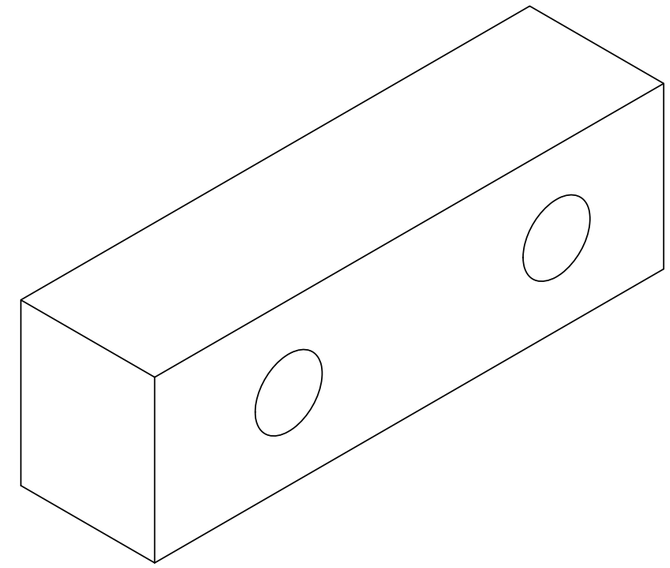

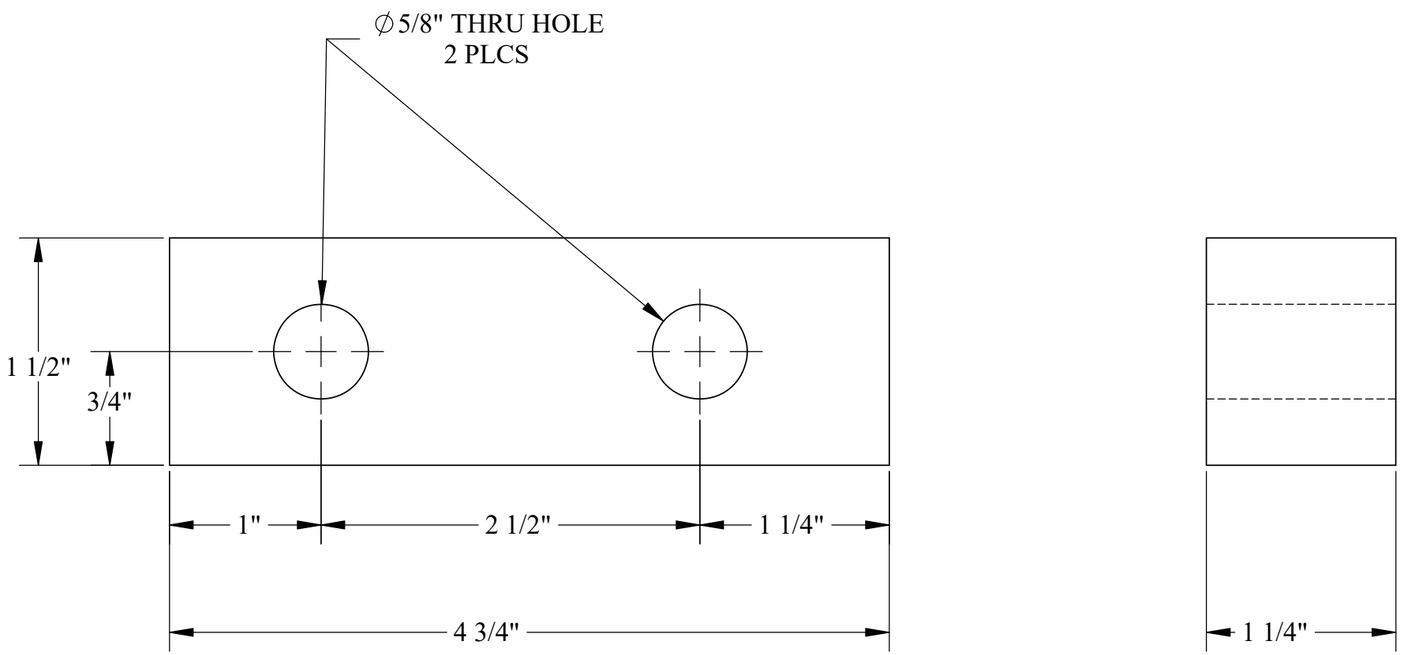

U.S.S. Monitor Steam Engine

Material	Drawn By - Date	Sub-Assembly
STEEL	RWC 10-2018	Reversing Shaft
Weight (Lbs) 2.32	Description	
Scale 1:1	Pinion Gear Key	
Part # **RS 14**		

© 2018 R.W.Carlstedt

NOTE: SECTION VIEW B-B GEAR TOOTH DETAILS IS DISPLAYED ON PAGE 2 OF 2

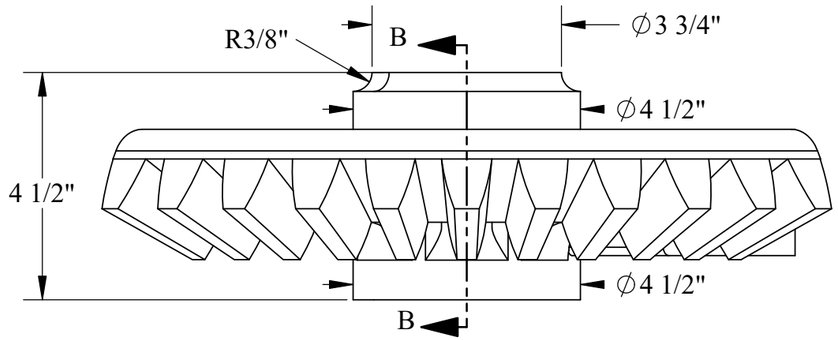

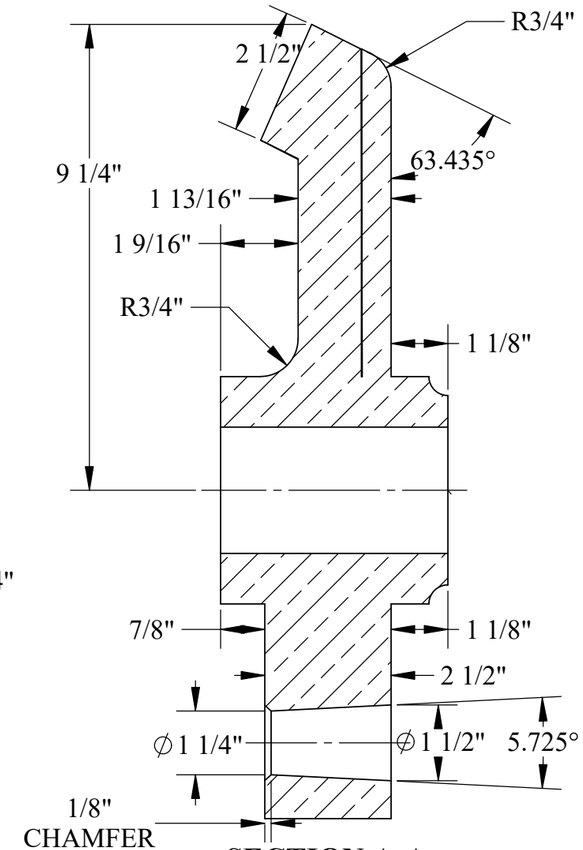

SECTION A-A

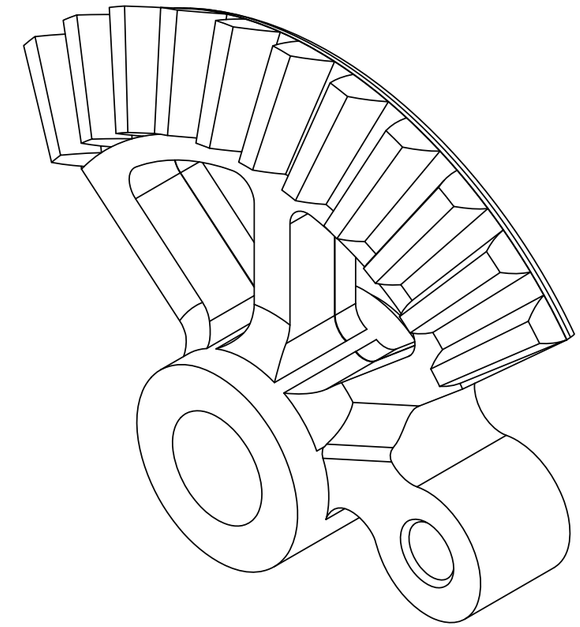

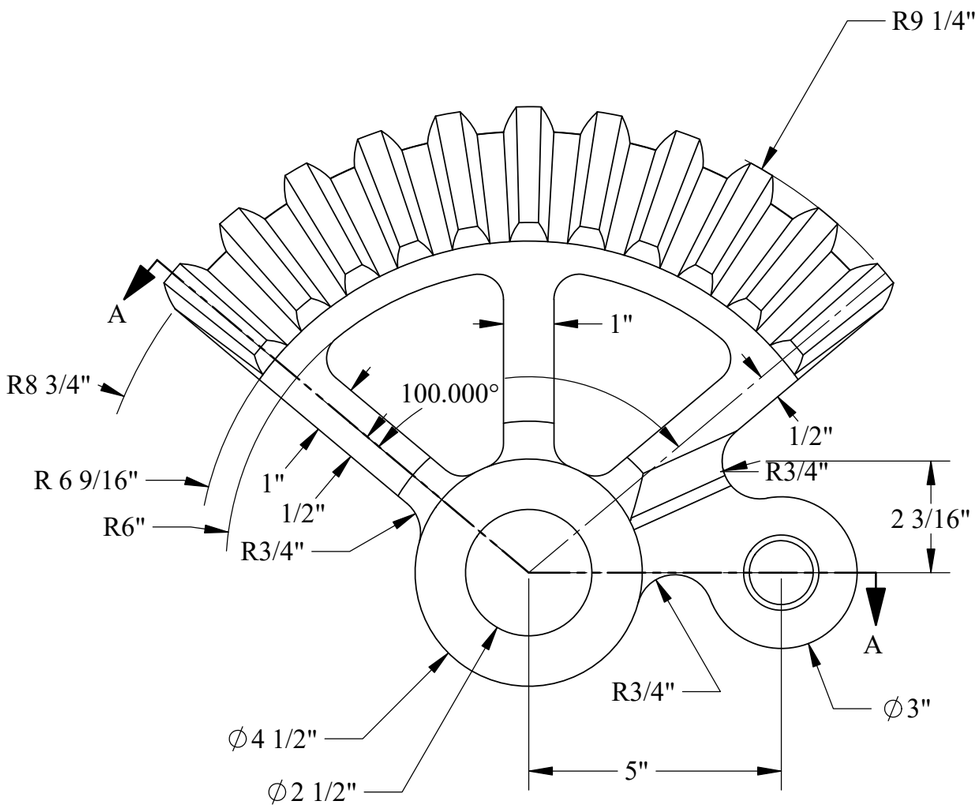

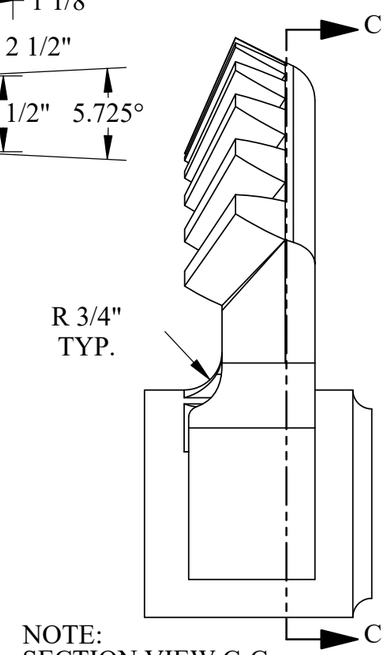

NOTE:
SECTION VIEW C-C
SHOWING WEB DETAILS
DISPLAYED ON SHEET 2

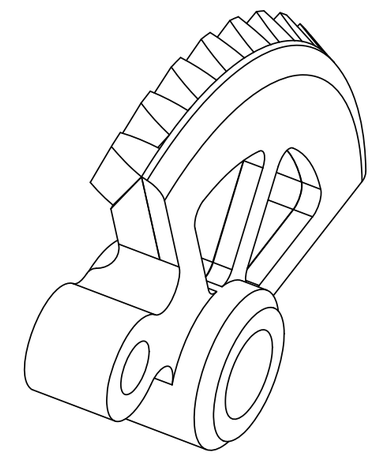

U.S.S. Monitor Steam Engine

Material: Bronze	Drawn By - Date: RWC 10-2018	Sub-Assembly: Reversing Shaft
Weight (Lbs): 47.35	Description: Quadrant Gear	
Scale: 1:3		
Part #: **RS 15**	SHEET 1 OF 2	

© 2018 R.W.Carlstedt

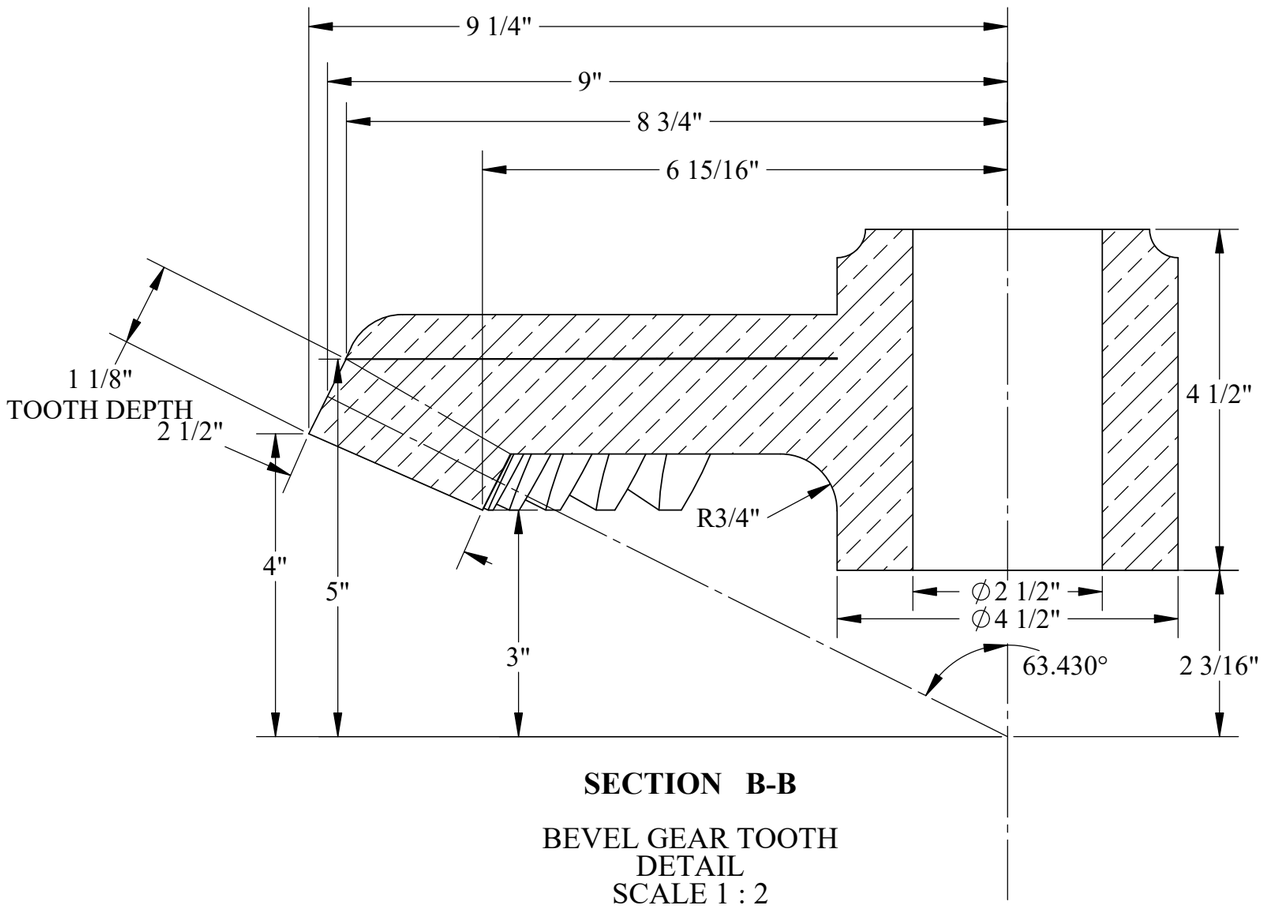

SECTION B-B

BEVEL GEAR TOOTH
DETAIL
SCALE 1 : 2

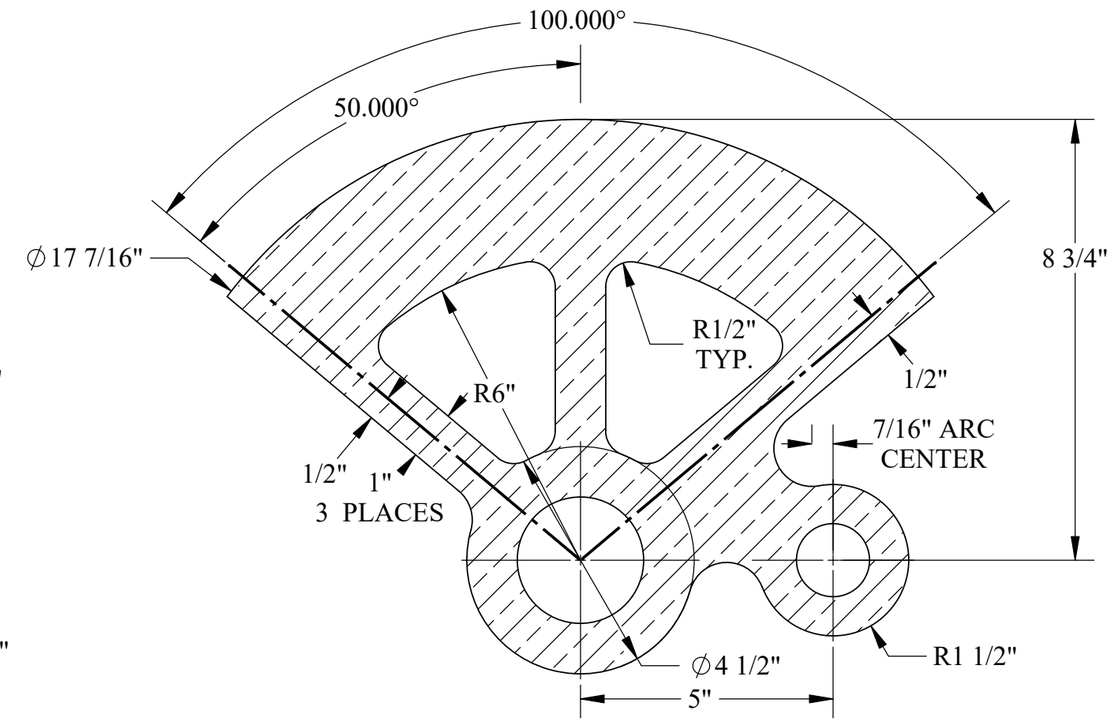

SECTION C-C

SECTION VIEW C-C
SHOWING WEB DETAILS

PD- PITCH DIAMETER = 18"
ADDENDUM+DEDENDUM = 1-1/8"
WD- WORKING DEPTH = 1"
ANGLE OF BEVEL GEAR = 63.43 DEG.
P - DIAMETRAL PITCH = 2 (36/18=2)
FULL GEAR WOULD BE = 36 TEETH *
FULL NUMBER OF TEETH = 11

*QUADRANT HAS 10 PER 100 DEGREES

U.S.S. Monitor Steam Engine

Material	Drawn By - Date	Sub-Assembly
Bronze	RWC 10-2018	Reversing Shaft
Weight (Lbs) 47.35	Description	
Scale 1:3	Quadrant Gear	
Part # **RS 15**	SHEET 2 OF 2	

© 2018 R.W.Carlstedt

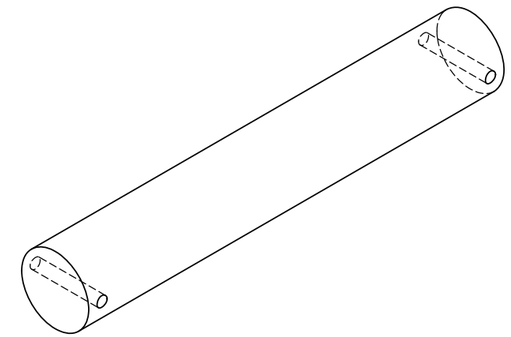

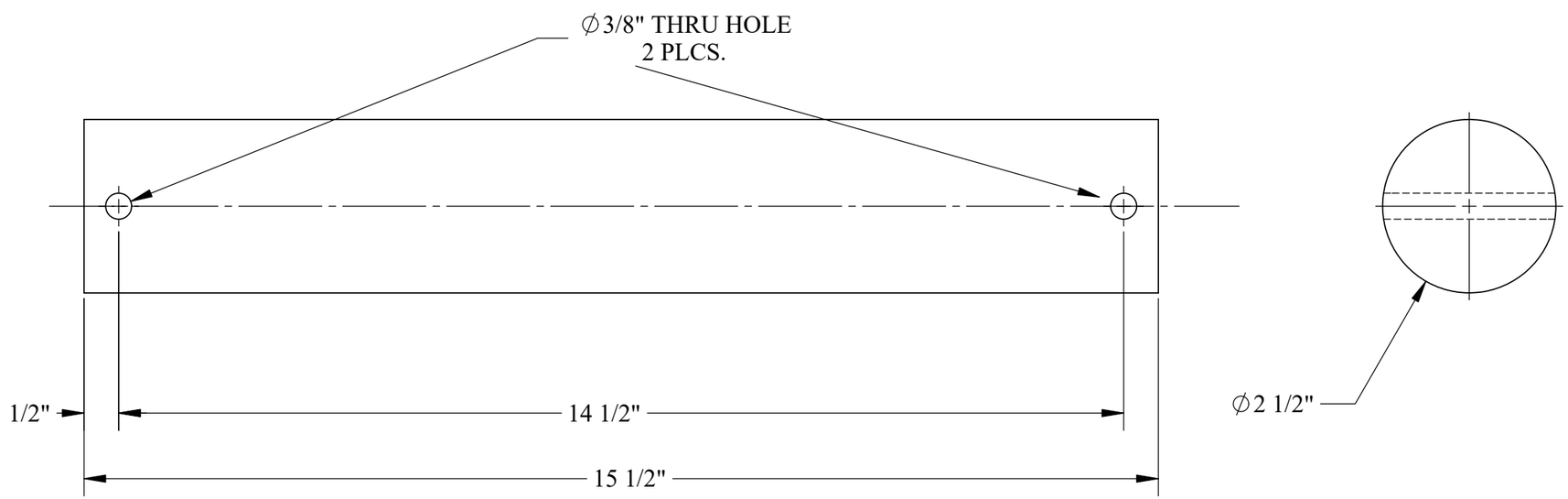

U.S.S. Monitor Steam Engine

Material: STEEL	Drawn By - Date: RWC 10-2018	Sub-Assembly: Reversing Shaft
Weight (Lbs): 21.56	Description: Pinion Gear Shaft	
Scale: 1:2		
Part #: **RS 16**		

© 2018 R.W.Carlstedt

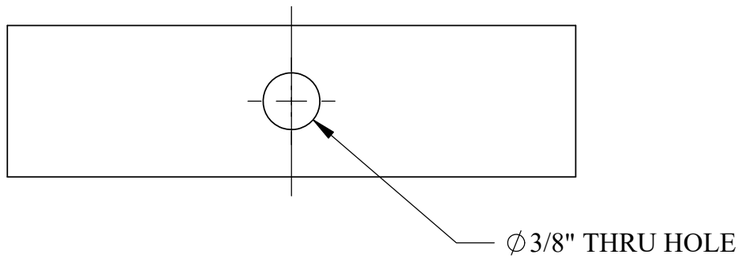

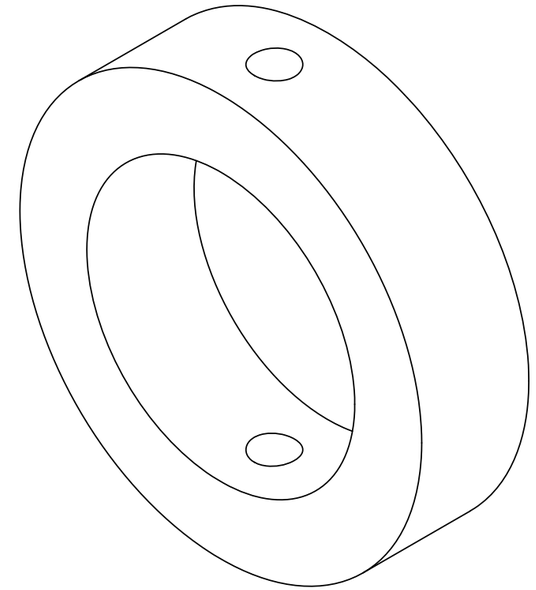

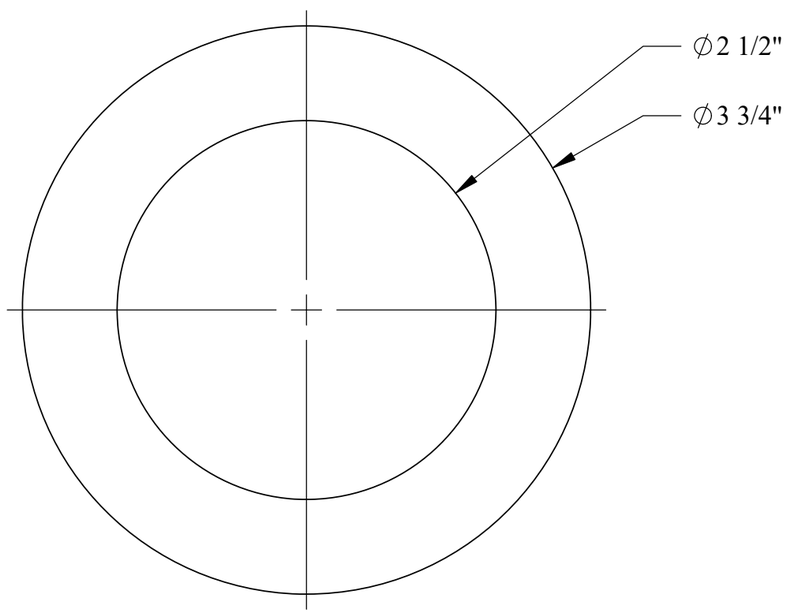

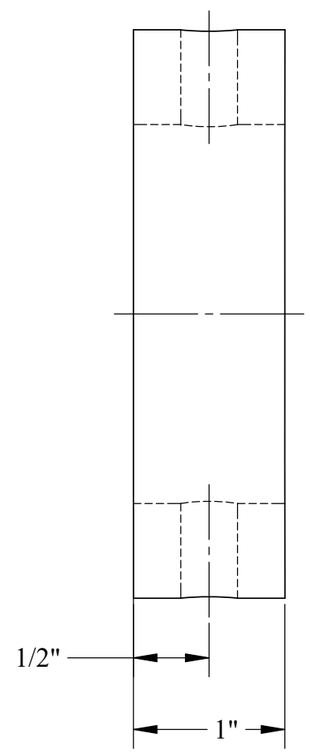

U.S.S. Monitor Steam Engine

Material	Drawn By - Date	Sub-Assembly
STEEL	RWC 10-2018	Reversing Shaft
Weight (Lbs) 1.71	Description	
Scale 1:1	Quadrant Gear Shaft Collar	
Part # **RS 17**		

© 2018 R.W.Carlstedt

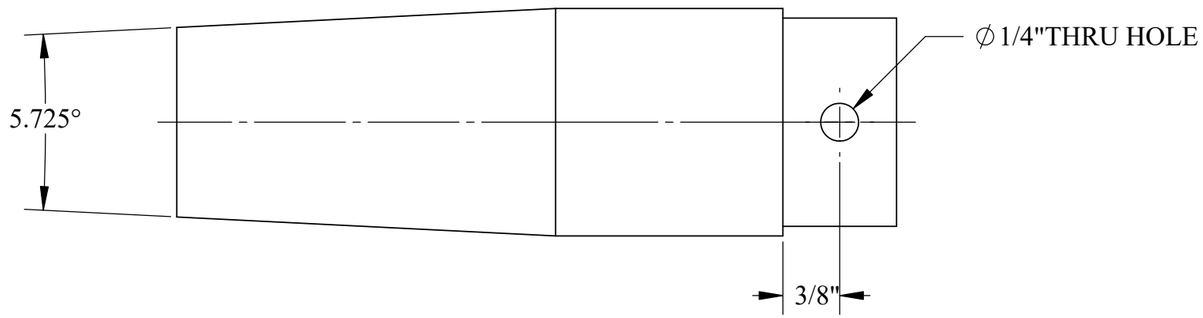

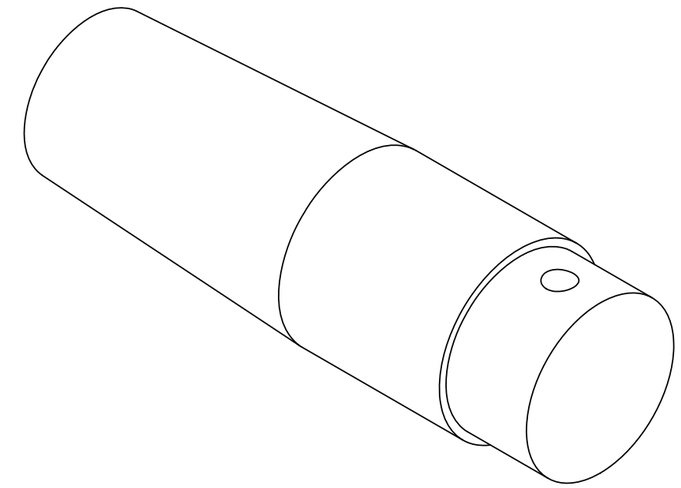

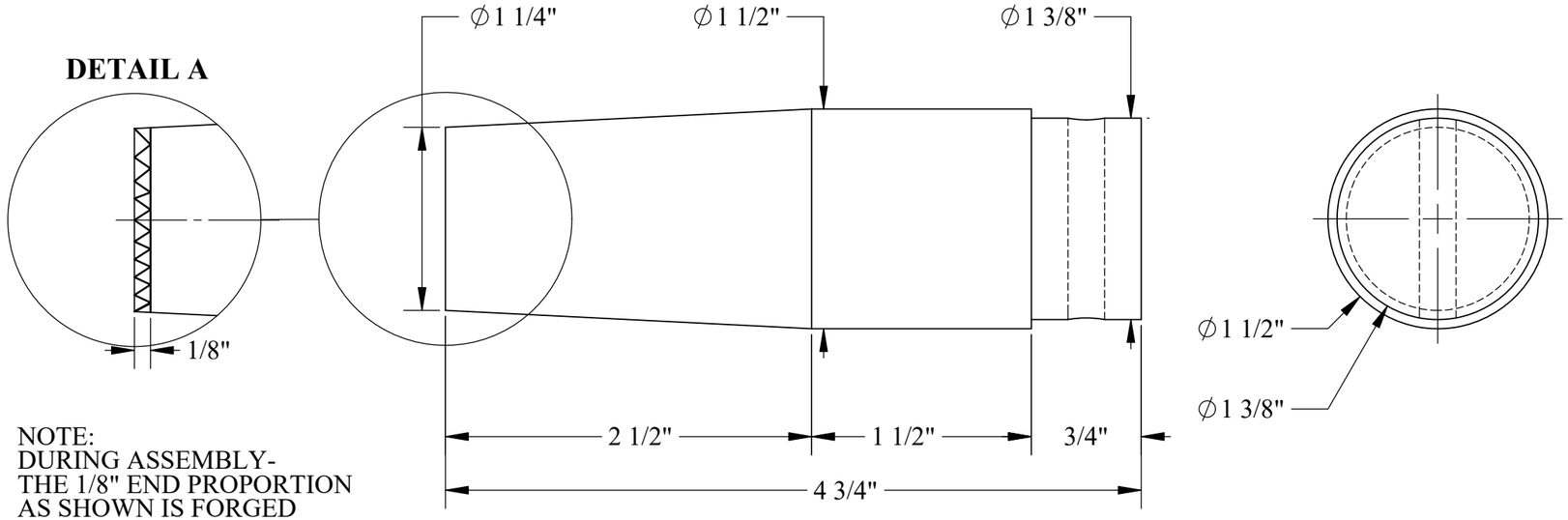

NOTE:
DURING ASSEMBLY-
THE 1/8" END PROPORTION
AS SHOWN IS FORGED
("UPSETTING") INTO THE
CHAMFERRED RELIEF AREA
OF THE MATING PART-
LOCKING IT IN PLACE
PERMANENTLY

U.S.S. Monitor Steam Engine

Material	Drawn By - Date	Sub-Assembly
STEEL	RWC 10-2018	Reversing Shaft
Weight (Lbs) 2.12	Description	
Scale 1:1	Quadrant Gear Link Pin	
Part # **RS 18**		

© 2018 R.W.Carlstedt

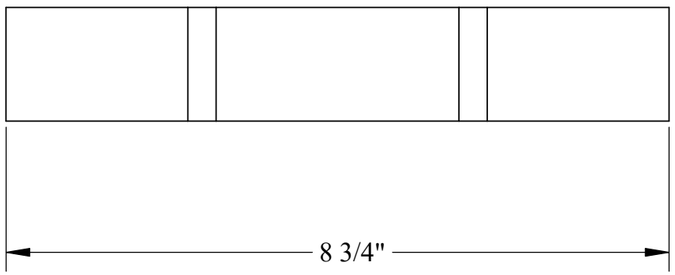

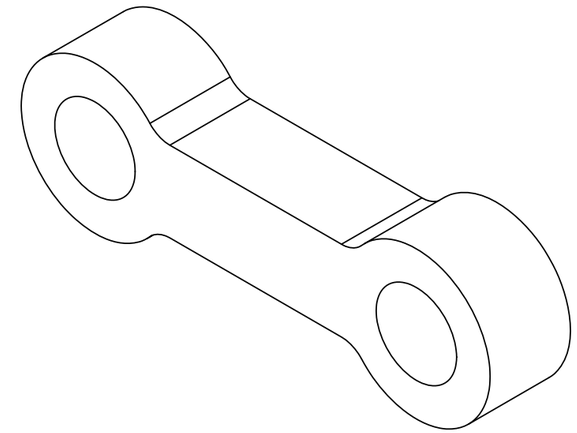

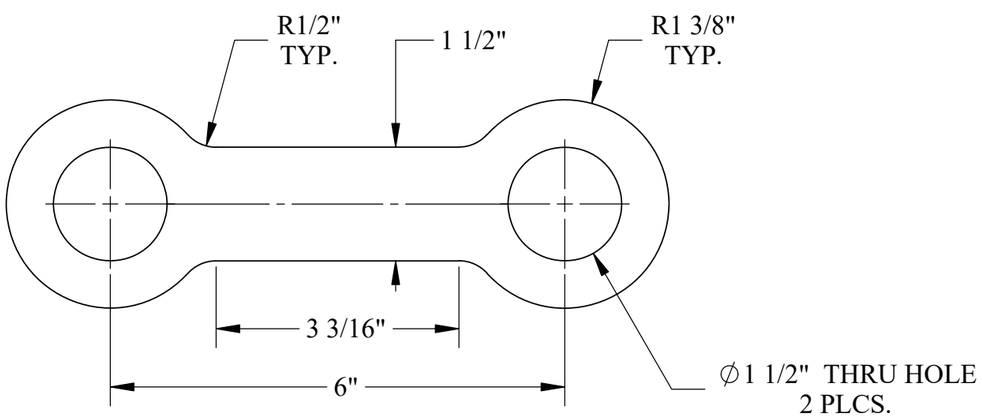

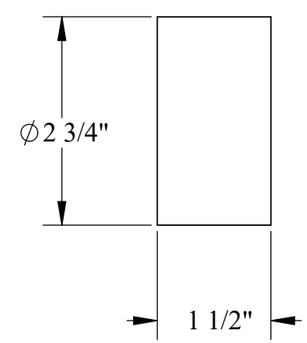

U.S.S. Monitor Steam Engine

Material	Drawn By - Date	Sub-Assembly
STEEL	RWC 10-2018	Reversing Shaft
Weight (Lbs) 5.76502	Description	
Scale 1:2	Reversing Link	
Part # **RS 19**		

© 2018 R.W.Carlstedt

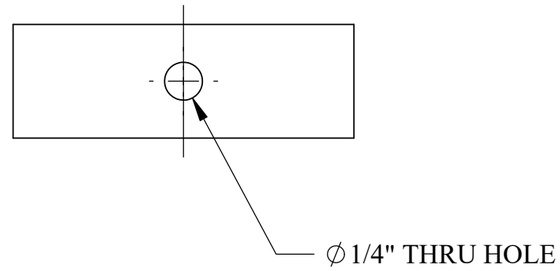

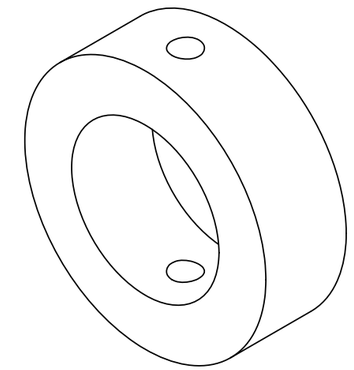

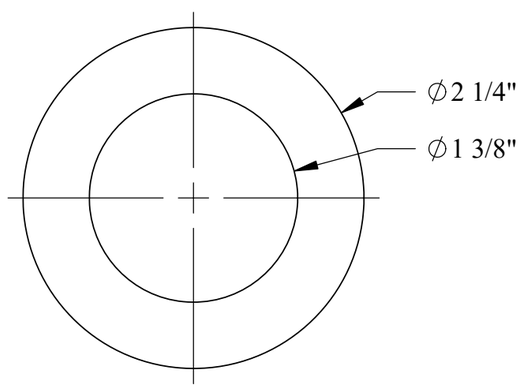

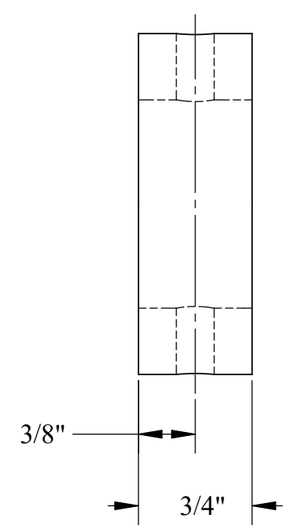

U.S.S. Monitor Steam Engine

Material: STEEL	Drawn By - Date: RWC 10-2018	Sub-Assembly: Reversing Shaft
Weight (Lbs): 0.52	Description: Link Pin Collar	
Scale: 1:1		
Part #: **RS 20**		

© 2018 R.W.Carlstedt

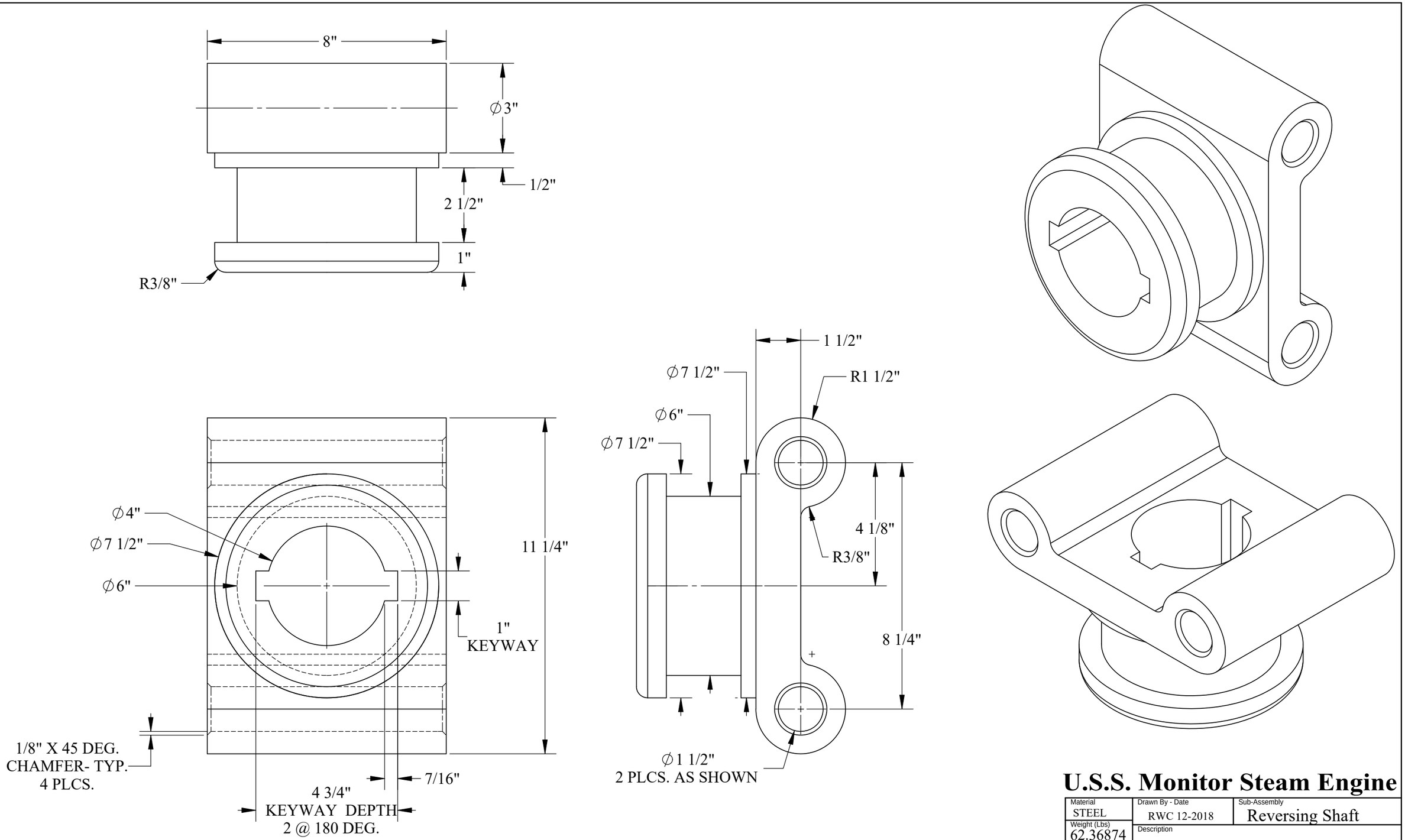

U.S.S. Monitor Steam Engine

Material: STEEL	Drawn By - Date: RWC 12-2018	Sub-Assembly: Reversing Shaft
Weight (Lbs): 62.36874	Description: Throwout Block	
Scale: 1:3		
Part #: **RS 21**		

© 2018 R.W.Carlstedt

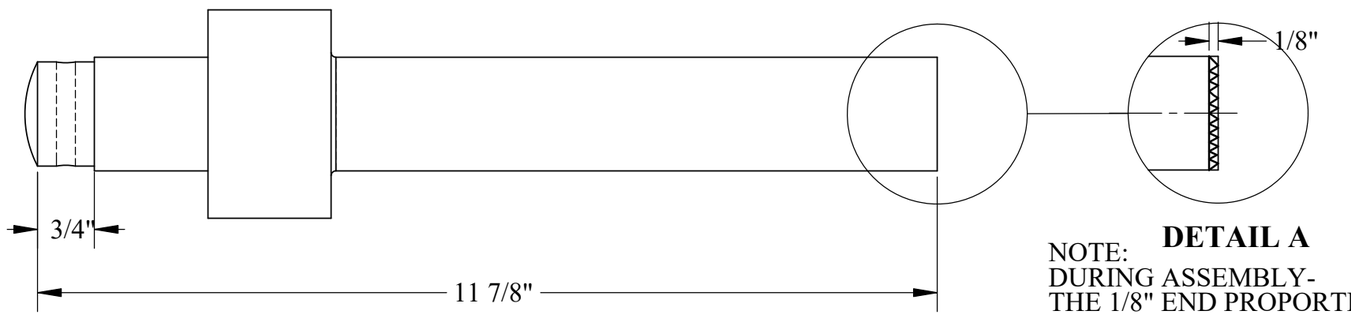

DETAIL A

NOTE:
DURING ASSEMBLY-
THE 1/8" END PROPORTION
AS SHOWN IS FORGED
("UPSETTING") INTO THE
CHAMFERRED RELIEF AREA
OF THE MATING PART-
LOCKING IT IN PLACE
PERMANENTLY

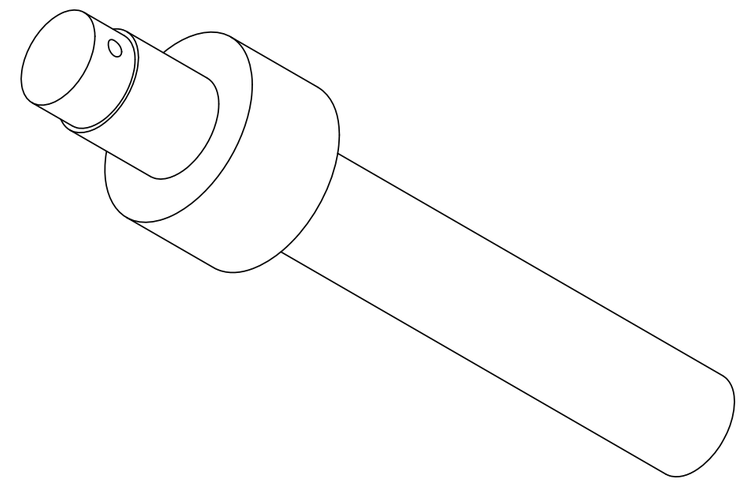

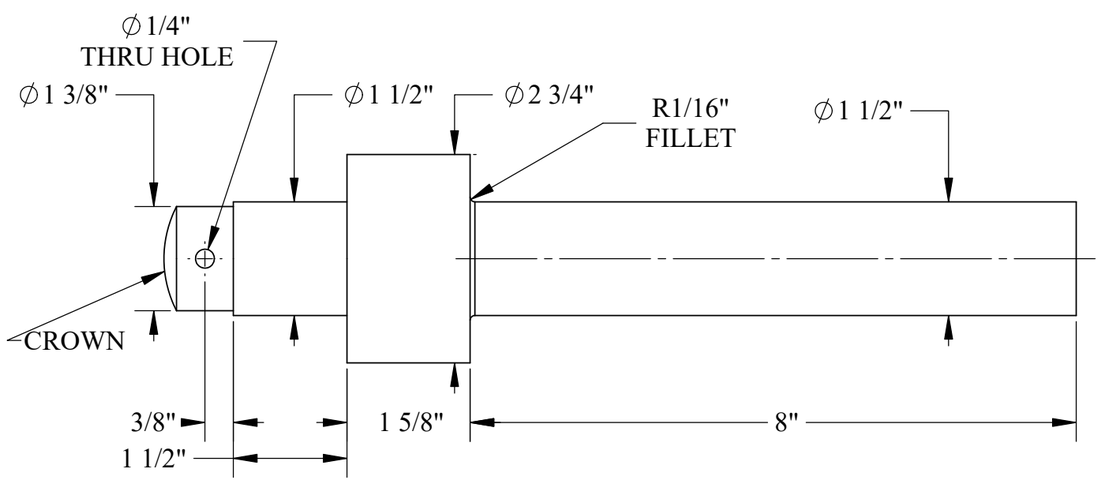

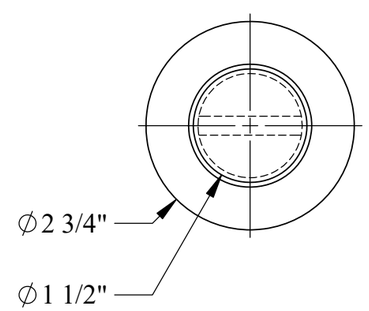

U.S.S. Monitor Steam Engine

Material: STEEL	Drawn By - Date: RWC 10-2018	Sub-Assembly: Reversing Shaft
Weight (Lbs): 7.88	Description: Throwout Block Pin	
Scale: 1:2		
Part #: **RS 22**		

© 2018 R.W.Carlstedt

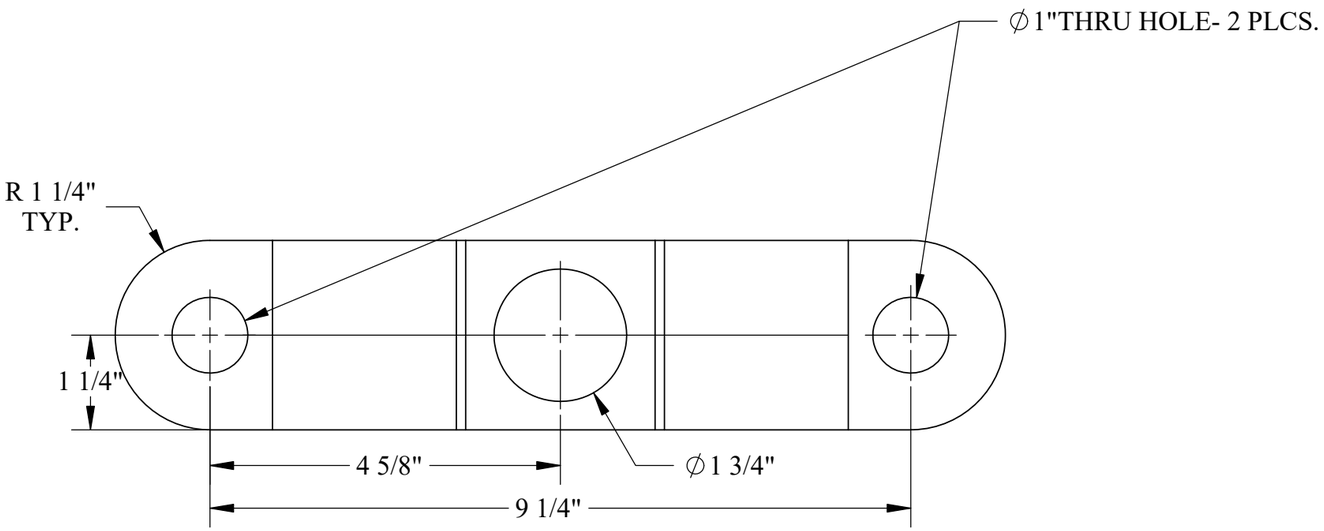

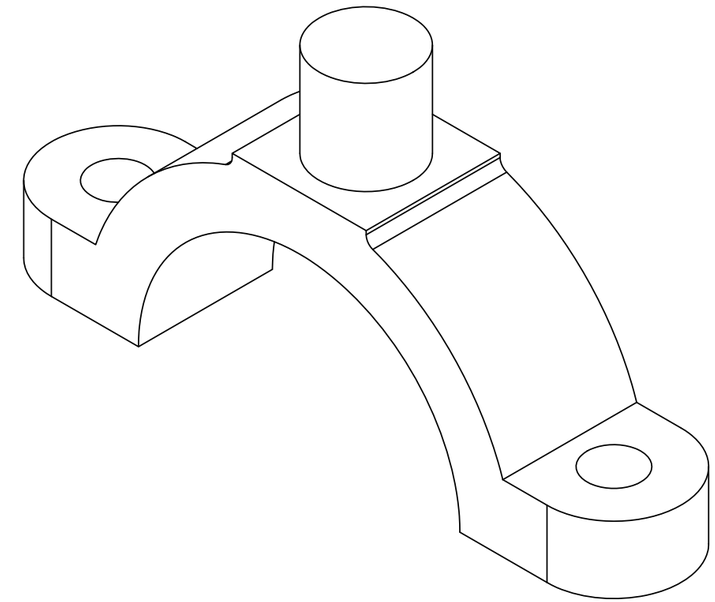

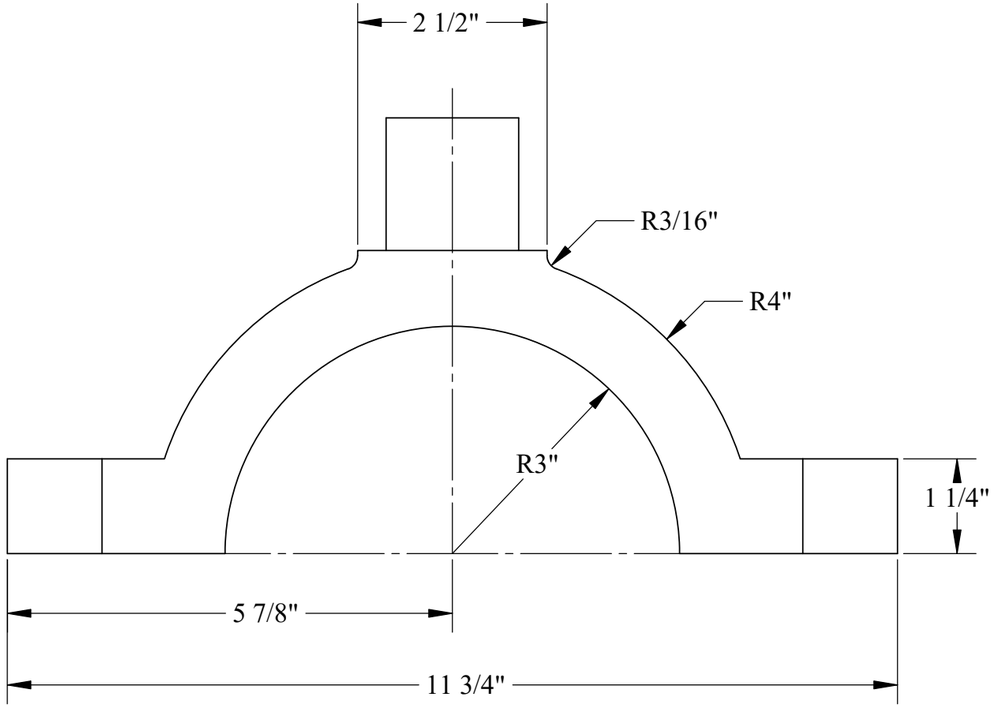

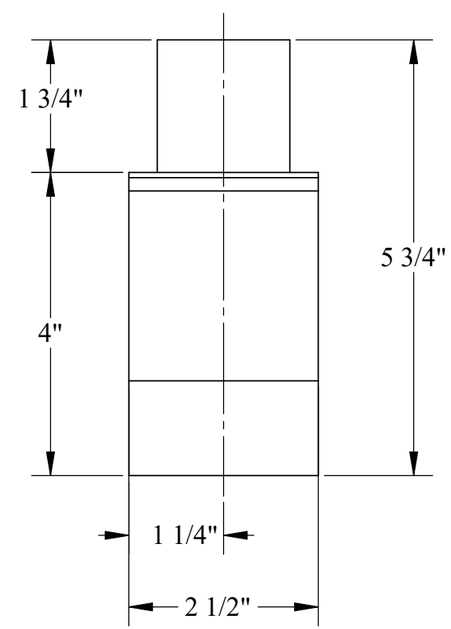

U.S.S. Monitor Steam Engine

Material: Brass	Drawn By - Date: RWC 10-2018	Sub-Assembly: Reversing Shaft
Weight (Lbs): 12.47	Description: Throwout Bearing Strap	
Scale: 1:2		
Part #: **RS 23**		

© 2018 R.W.Carlstedt

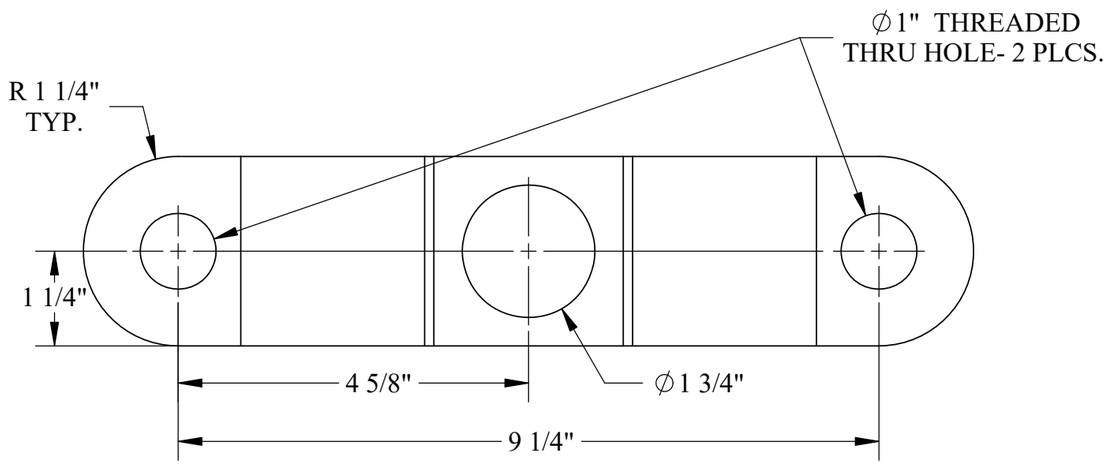

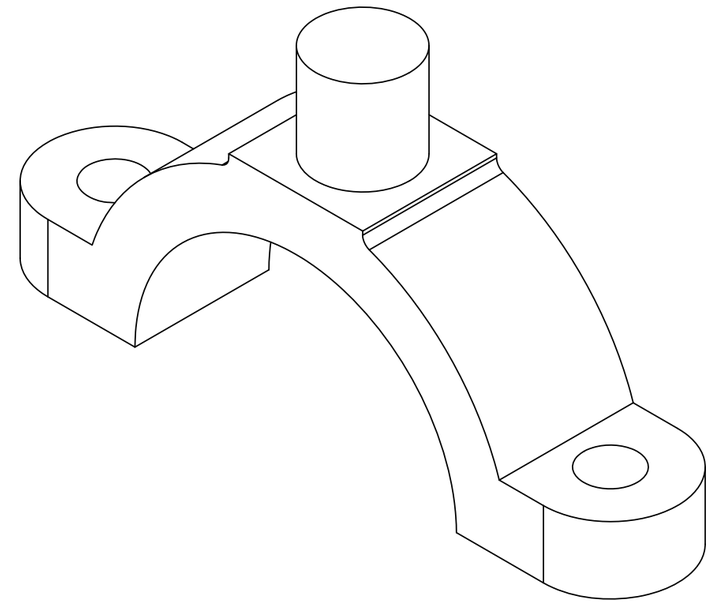

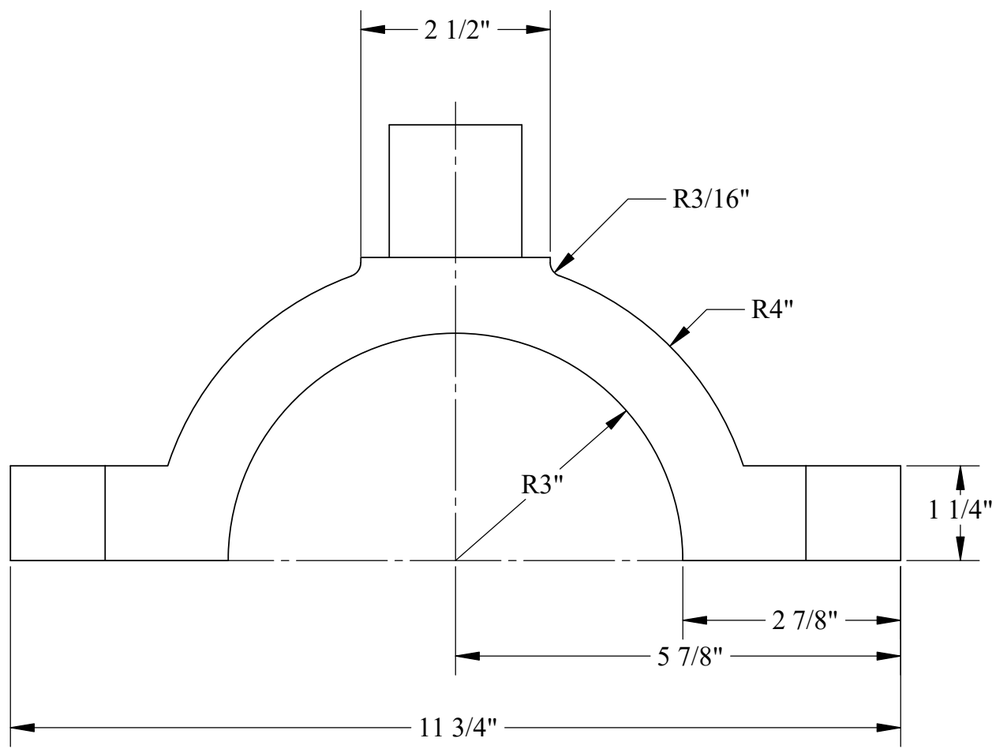

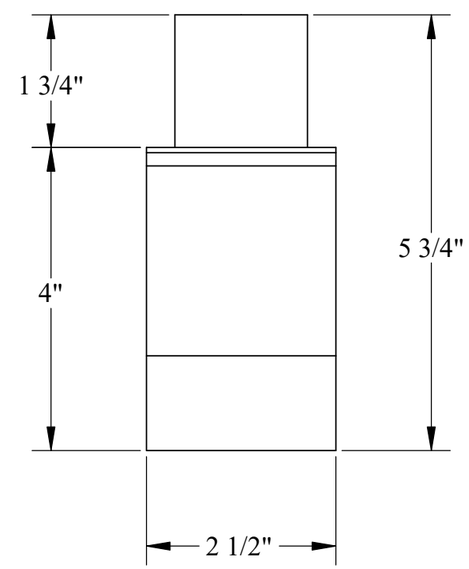

U.S.S. Monitor Steam Engine

Material	Drawn By - Date	Sub-Assembly
Brass	RWC 12-2018	Reversing Shaft
Weight (Lbs) 12.47	Description	
Scale 1:2	Throwout Bearing Strap- Threaded	
Part # **RS 24**		

© 2018 R.W.Carlstedt

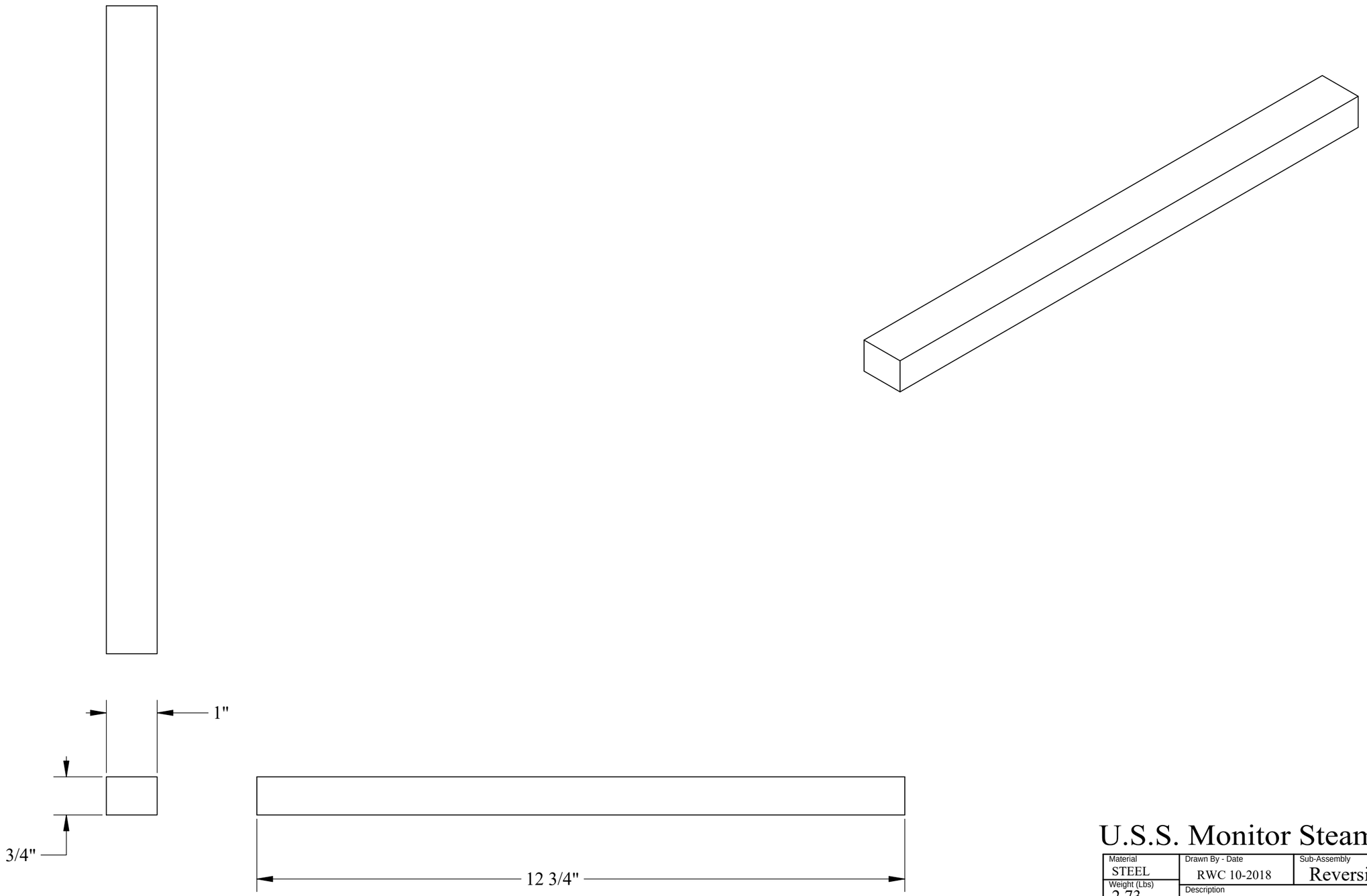

U.S.S. Monitor Steam Engine

Material: STEEL	Drawn By - Date: RWC 10-2018	Sub-Assembly: Reversing Shaft
Weight (Lbs): 2.73	Description: Throwout Bearing Key	
Scale: 1:2		
Part #: **RS 25**		

© 2018 R.W.Carlstedt