Rupnow Flathead Engine
Figure 3

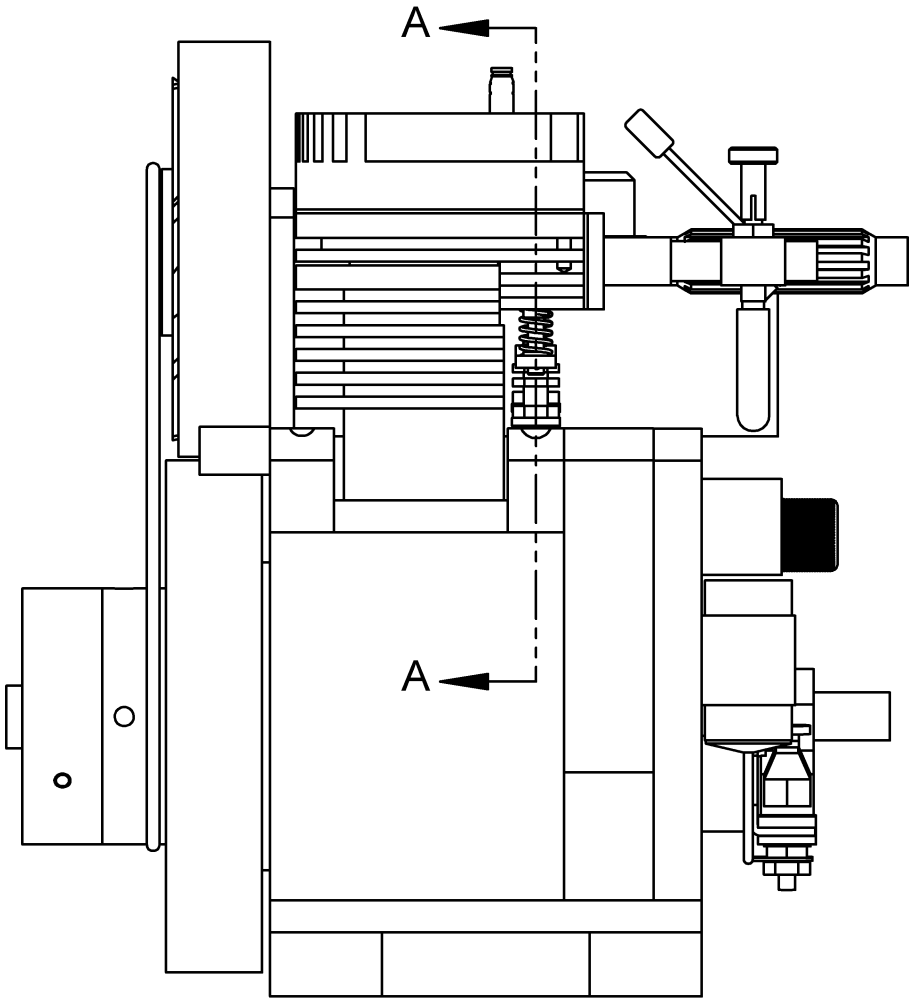

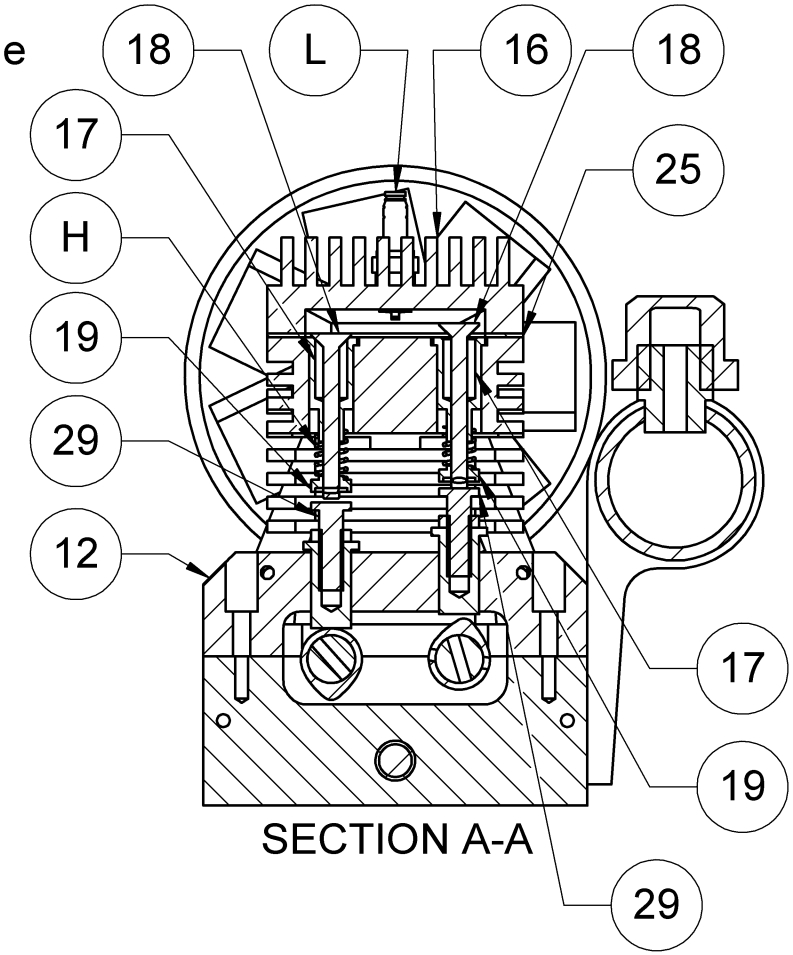

SECTION A-A

Cross section taken thru valves, valve guides, cams, and tappets.