Note: Technical data was courtesy of Rush Gear. Gears were made in my shop using 24 DP gear cutters.

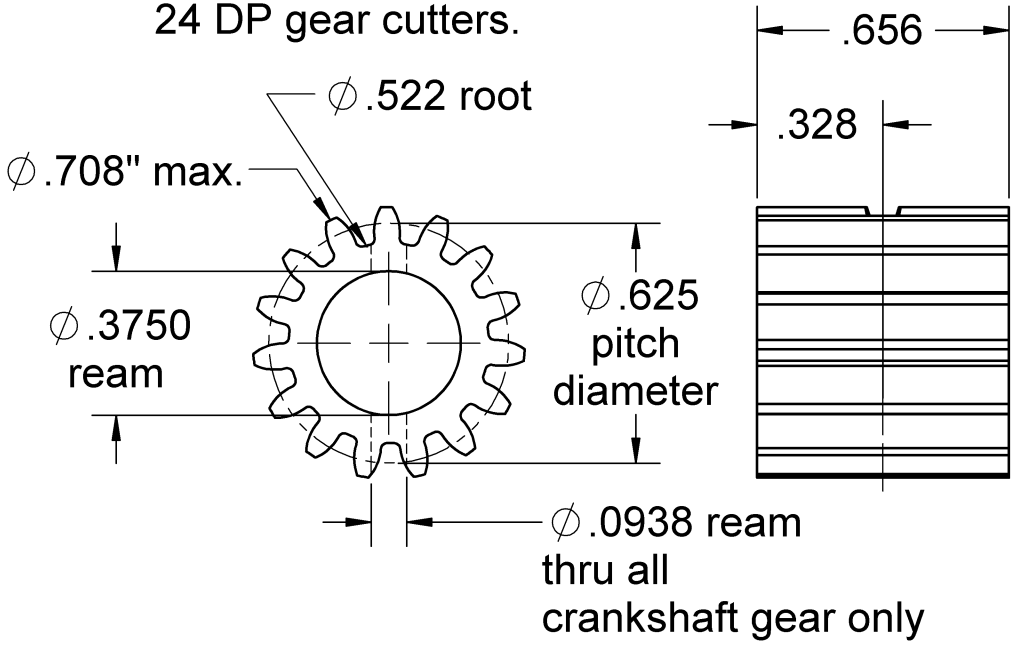

15-TOOTH GEAR

mat'l - cast iron - jockey gear

- steel - crankshaft gear

1 of each mat'l req'd

3