Rupnow Flathead Engine
Figure 1

Four Cycle Side Valve Engine
Air Cooled
1" Bore 1 1/8" Stroke
Dual Camshafts
Two Piece Crankshaft
Needle Roller Brgs on Con-rod
Ball Brgs and Bronze Bushings
on Crankshaft
Dry Sump

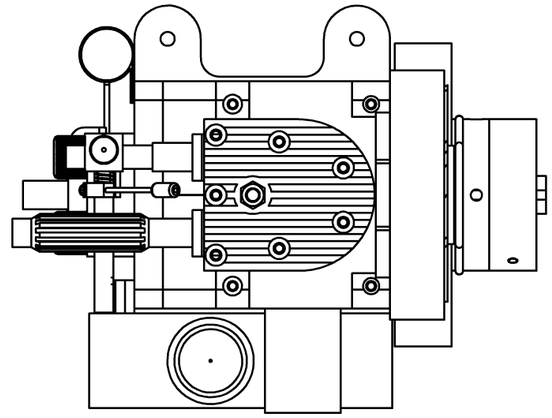

Engine totally machined
from Bar Stock
on manual 10" X 18" lathe
and small milling machine
No Castings!

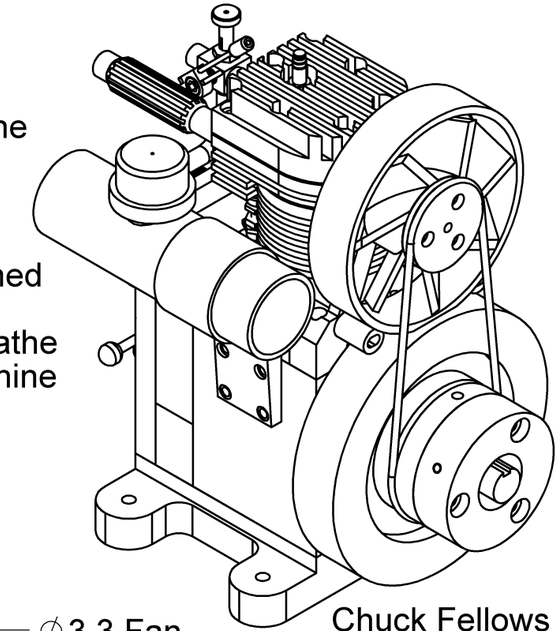

Manually Variable Timing

Automotive
Ignition Points

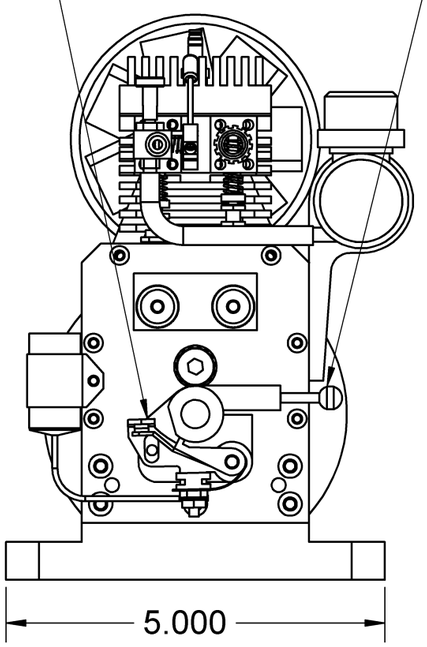

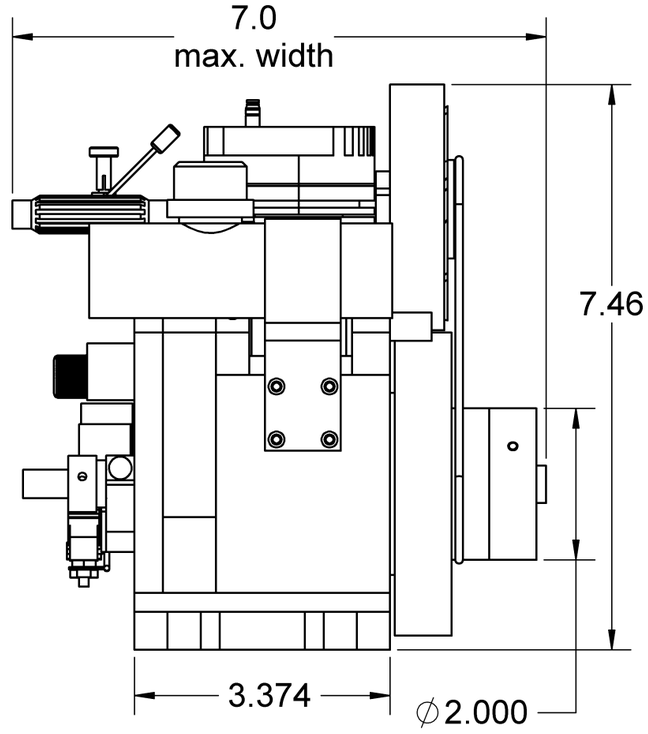

On Board Gas Tank

∅3" fan

∅3.3 Fan
Shroud

Chuck Fellows
Carburetor

O-ring
Drive
Belt

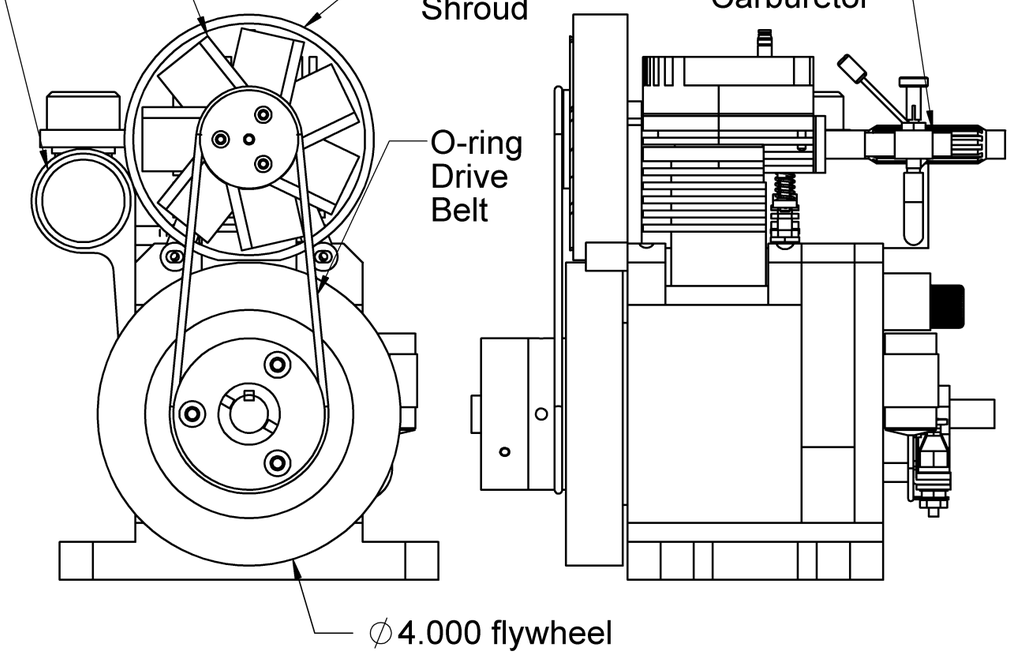

∅4.000 flywheel